# 8. Level 3 Repair

## 8-1. Block Diagram

### -Power Management

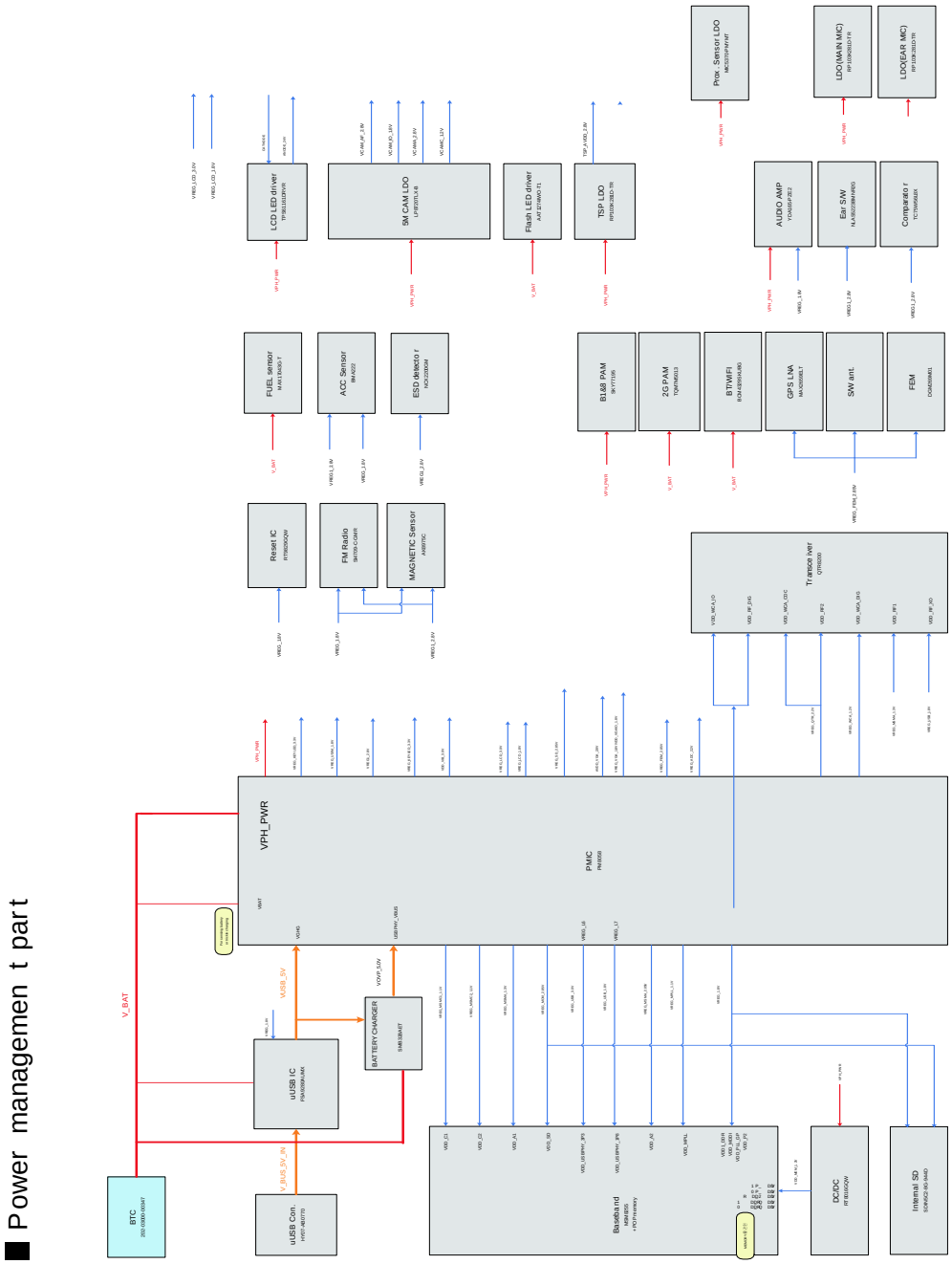




SAMSUNG Proprietary-Contents may change without notice
This Document can not be used without Samsung's authorization

-LCD part

■ LCD part

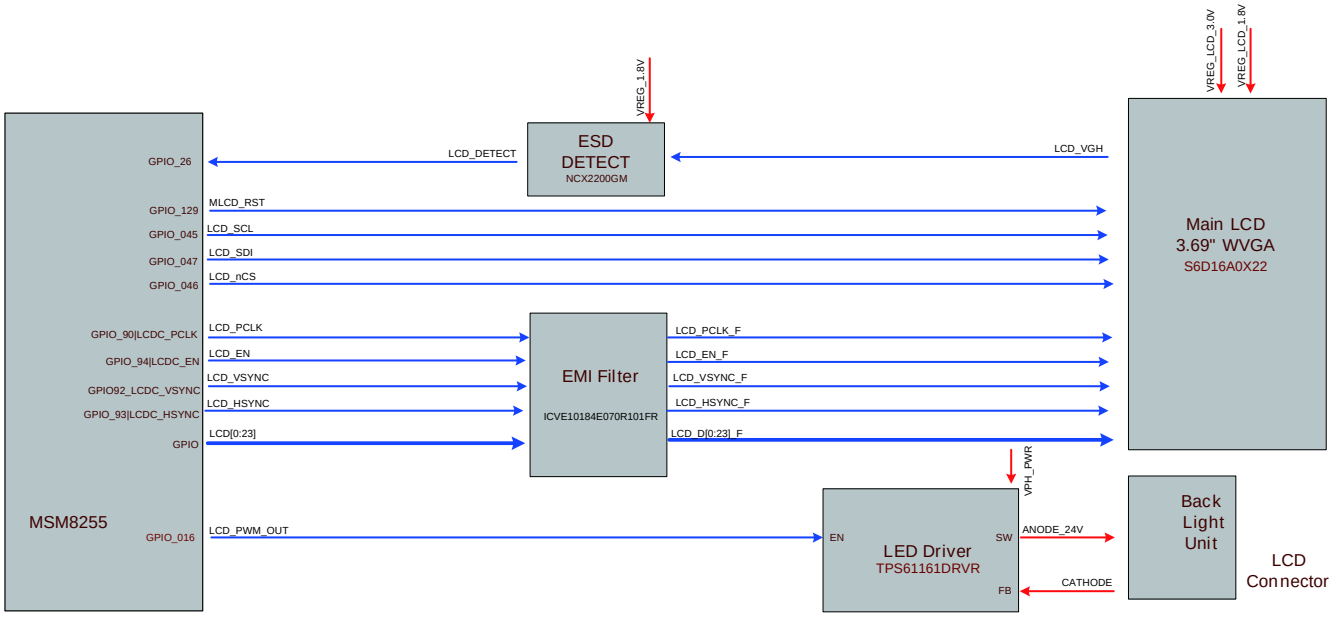


-

■ TSP part

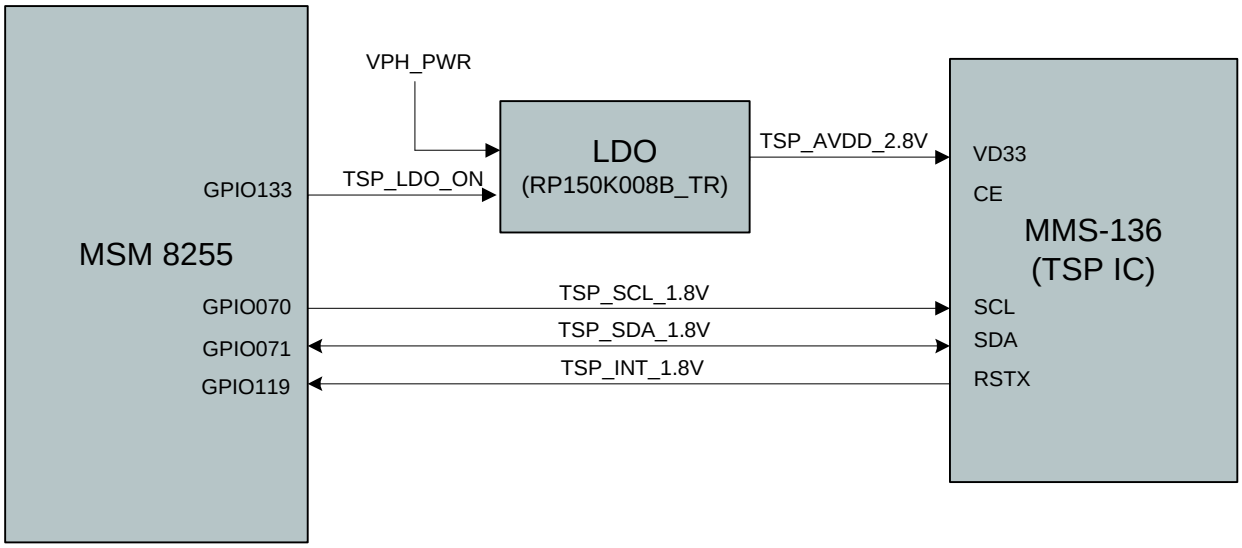




SAMSUNG Proprietary-Contents may change without notice
This Document can not be used without Samsung's authorization

## ■ CAMERA part

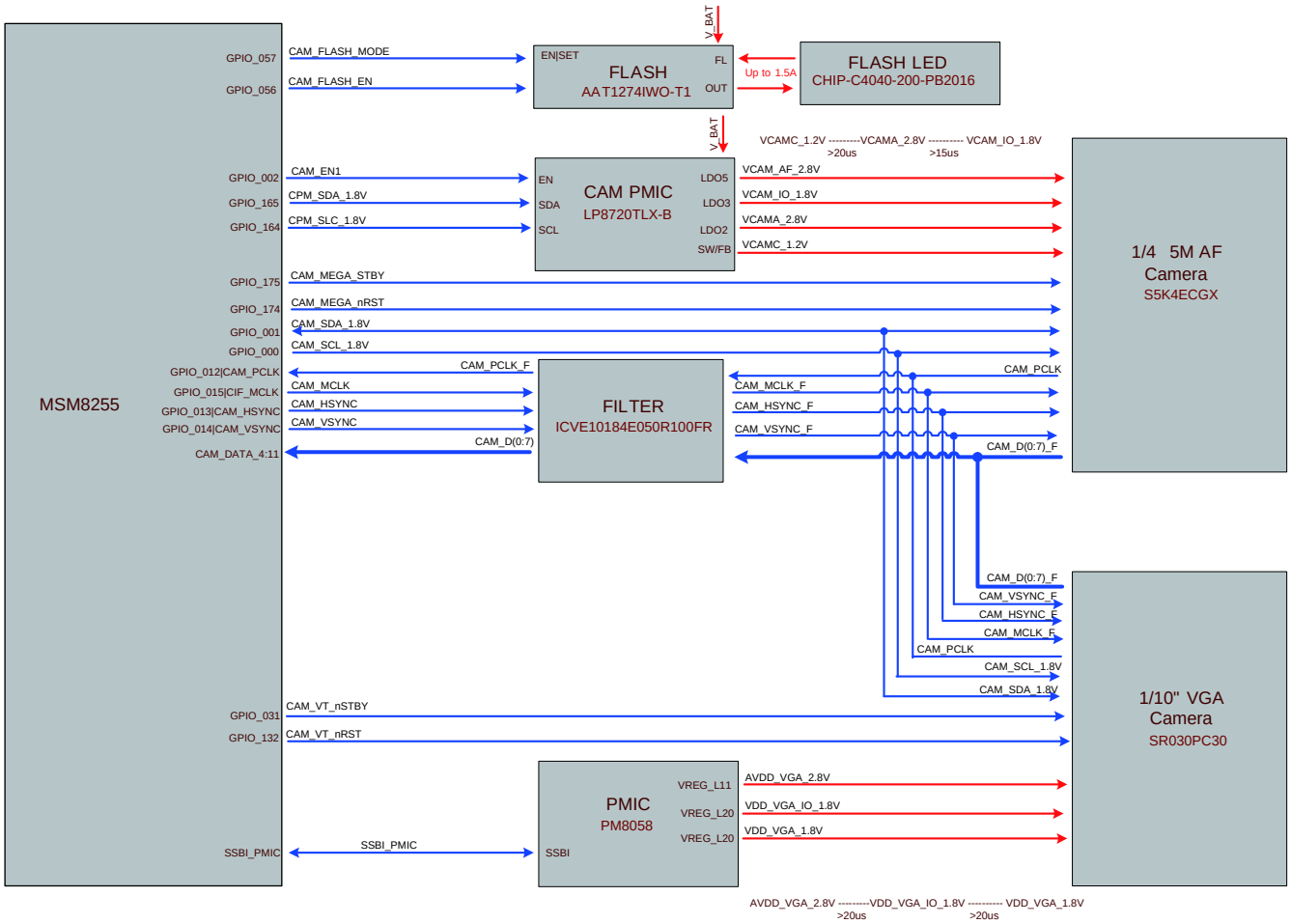




SAMSUNG Proprietary-Contents may change without notice
This Document can not be used without Samsung's authorization

## ■ AUDIO part

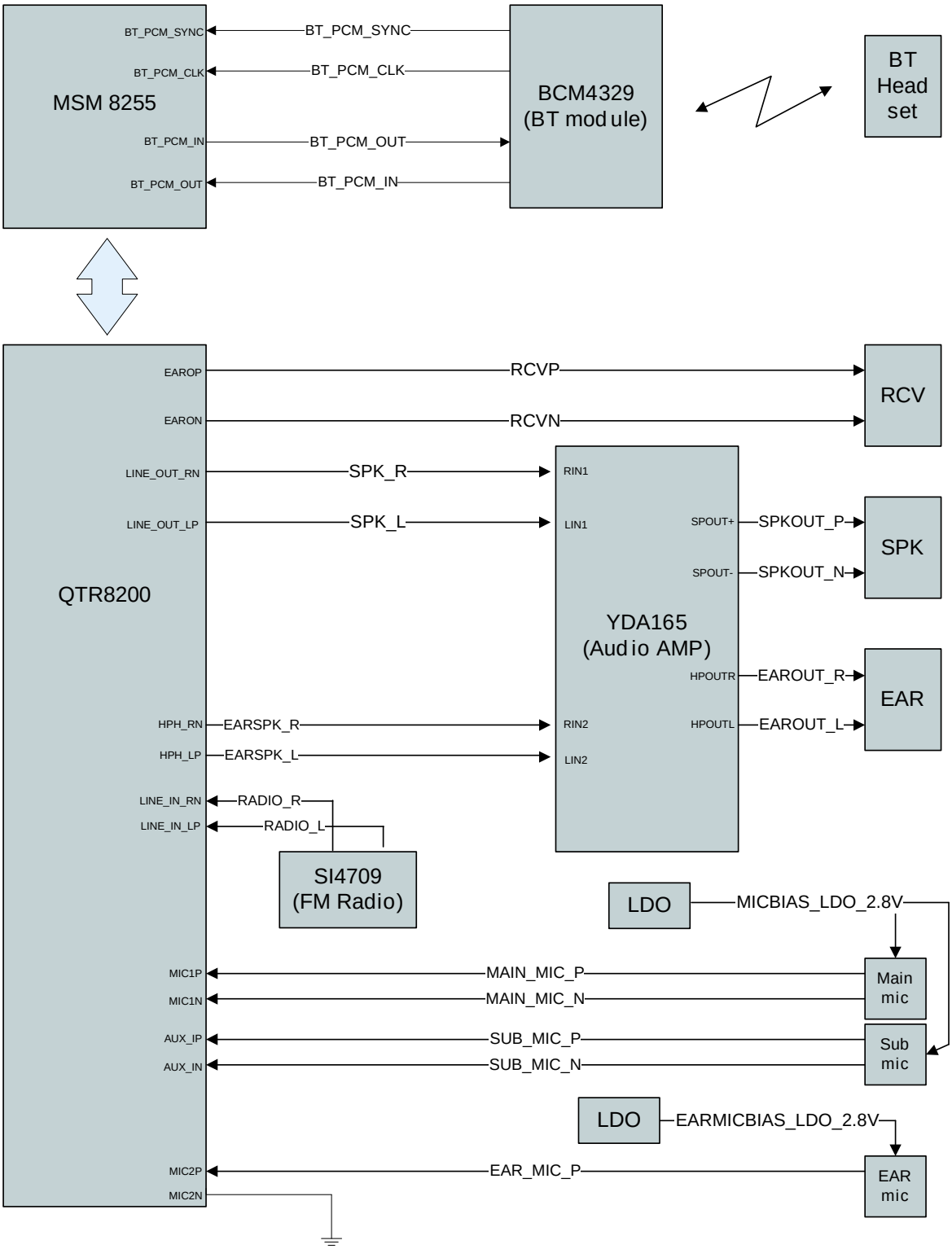




SAMSUNG Proprietary-Contents may change without notice
This Document can not be used without Samsung's authorization

■ BT/WIFI part

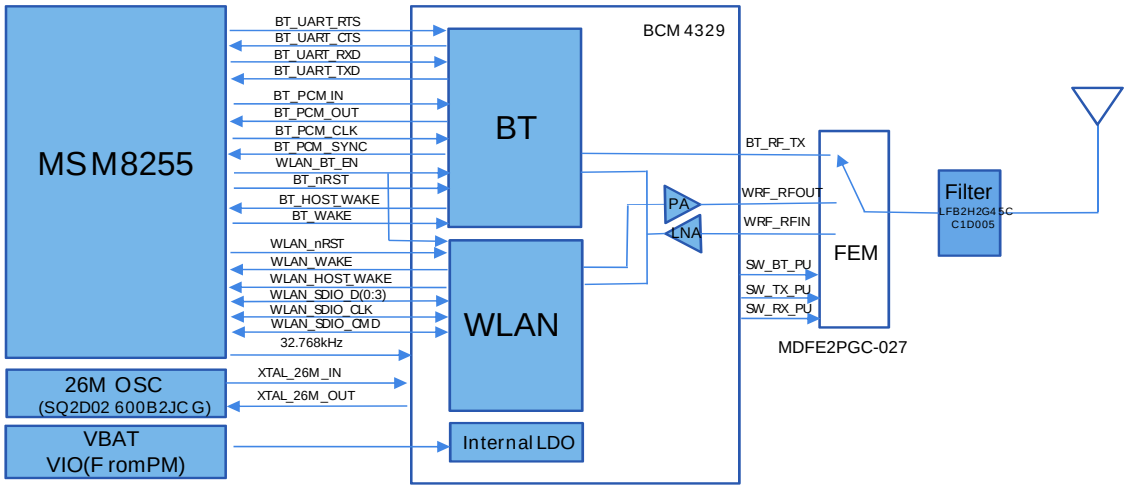


■ GPS part

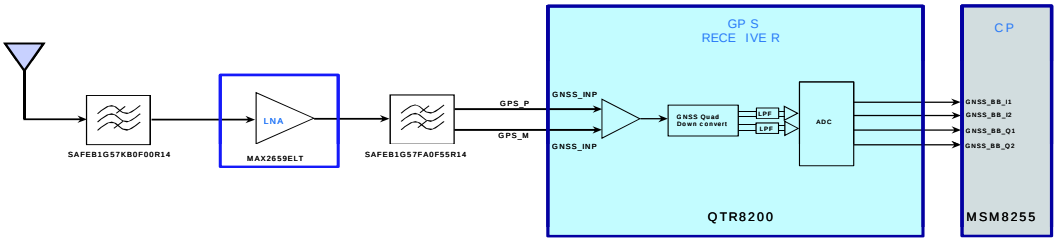




SAMSUNG Proprietary-Contents may change without notice
This Document can not be used without Samsung's authorization

## ■ MEMORY part

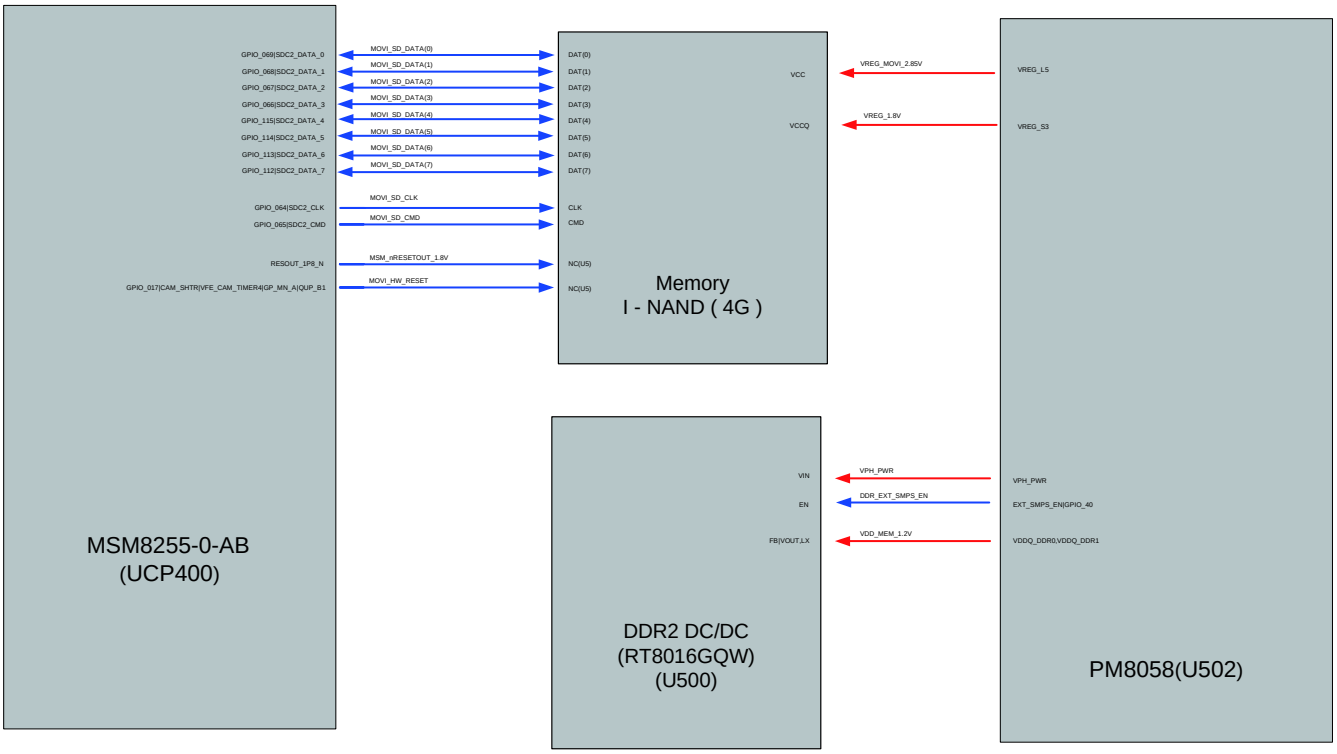


※

## ■ Proximity sensor part

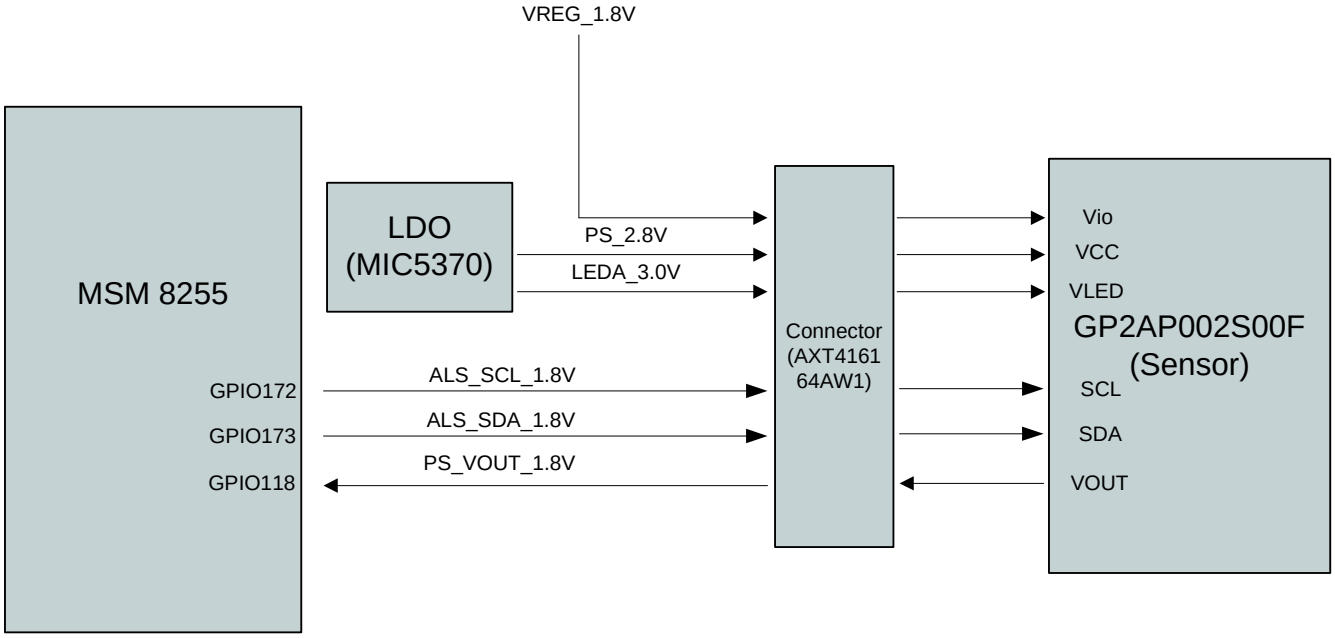




SAMSUNG Proprietary-Contents may change without notice
This Document can not be used without Samsung's authorization

## 8-2. PCB Diagrams

### 8-2-1. Top

SAMSUNG Proprietary-Contents may change without notice
This Document can not be used without Samsung's authorization

## 8-2-1. Bottom

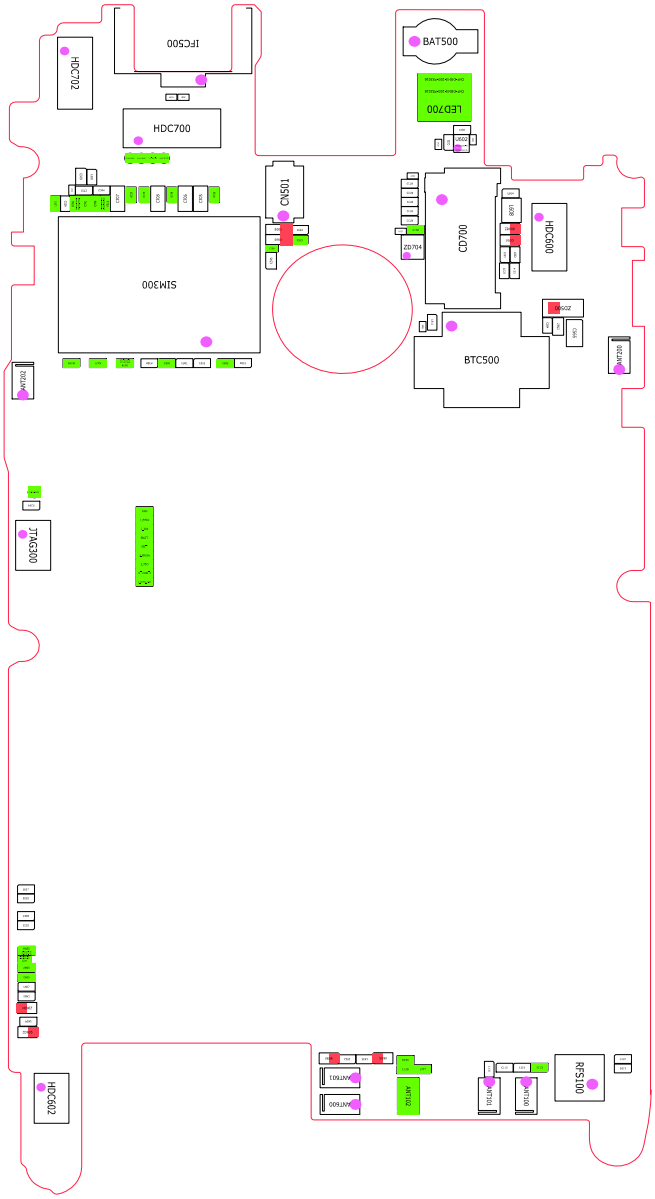




SAMSUNG Proprietary-Contents may change without notice
This Document can not be used without Samsung's authorization

## 8-3. Flow Chart of Troubleshooting

Equipments

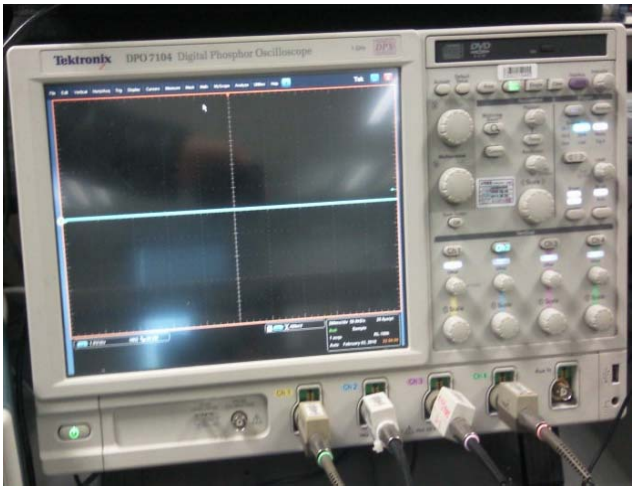


↑ Oscilloscope

↑ Digital Multimeter

↑ Power Supply

↑ + driver, Tweezer



SAMSUNG Proprietary-Contents may change without notice
This Document can not be used without Samsung's authorization

## 8-3-1. Power On

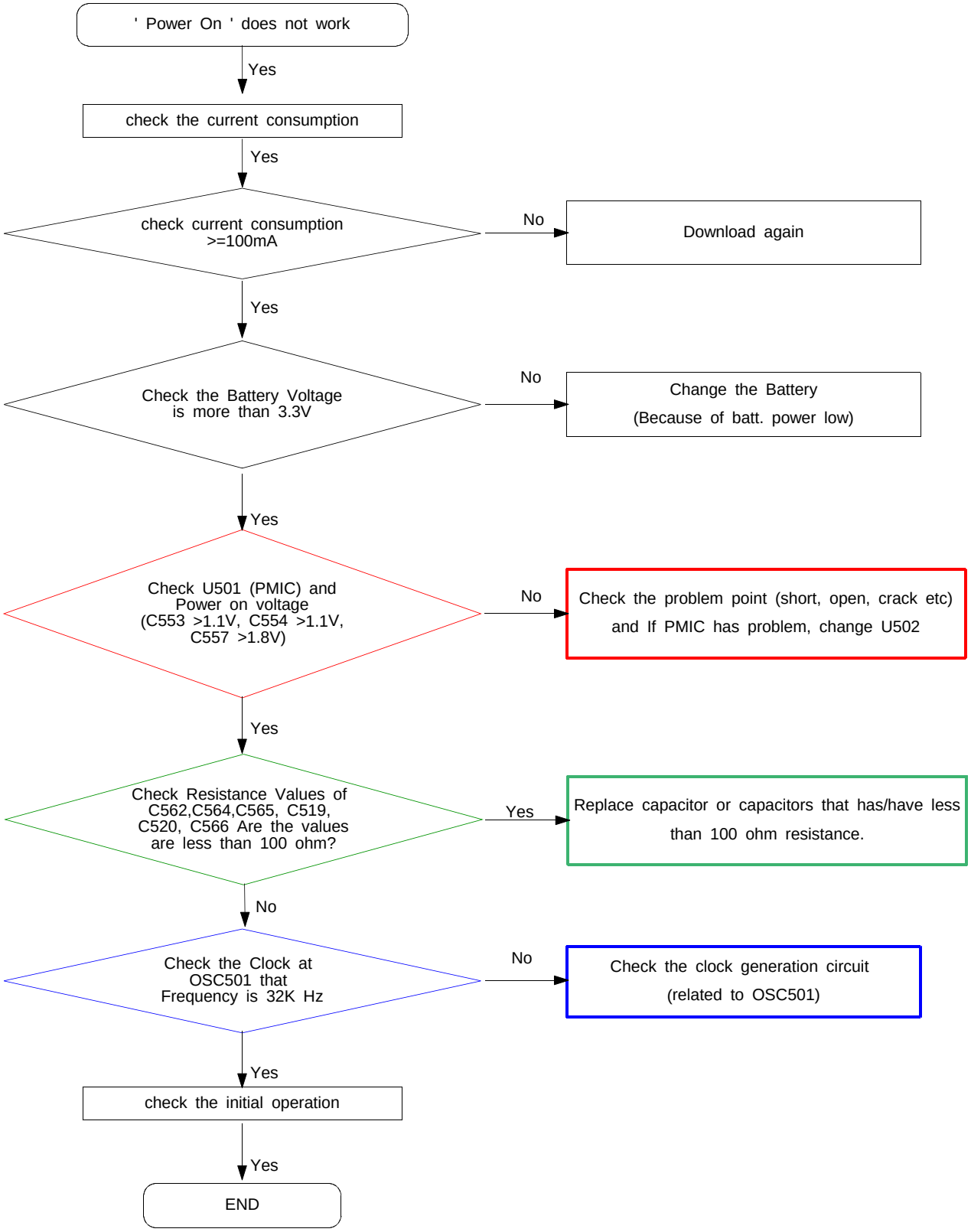




SAMSUNG Proprietary-Contents may change without notice
This Document can not be used without Samsung's authorization

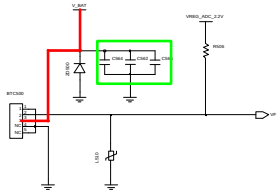


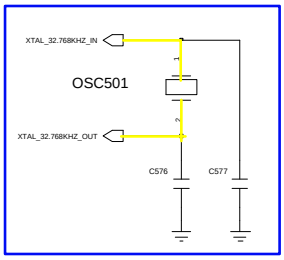


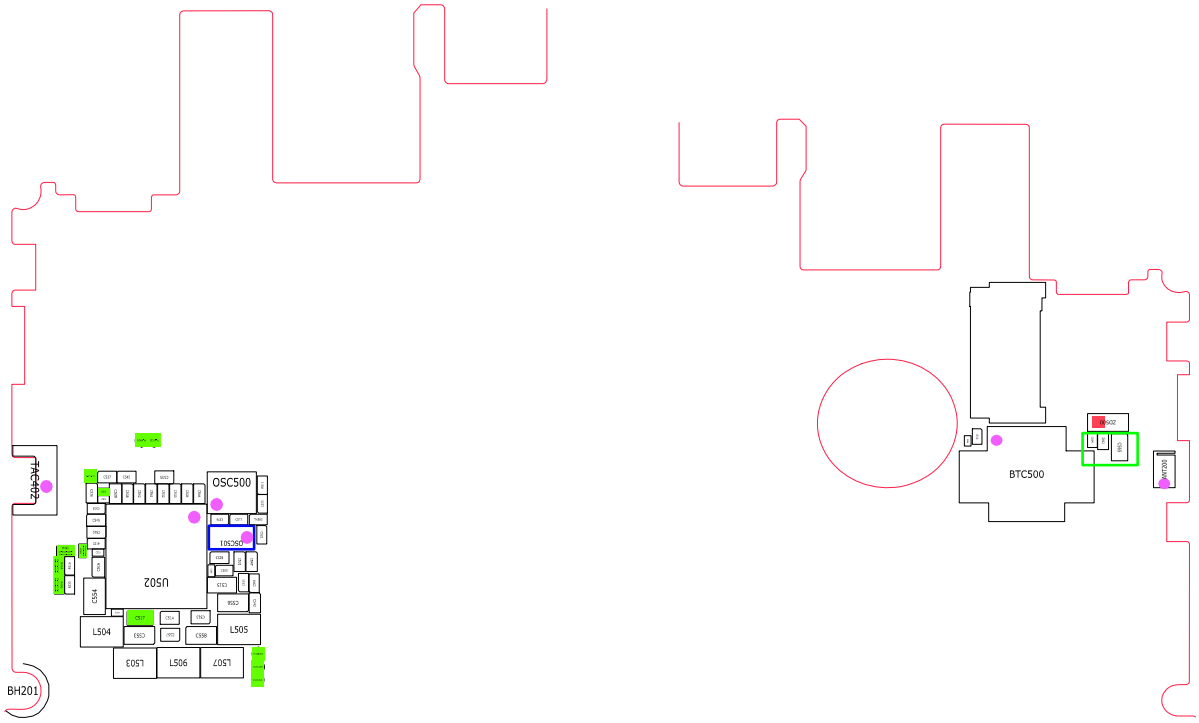




SAMSUNG Proprietary-Contents may change without notice
This Document can not be used without Samsung's authorization

## 8-3-2. Initial

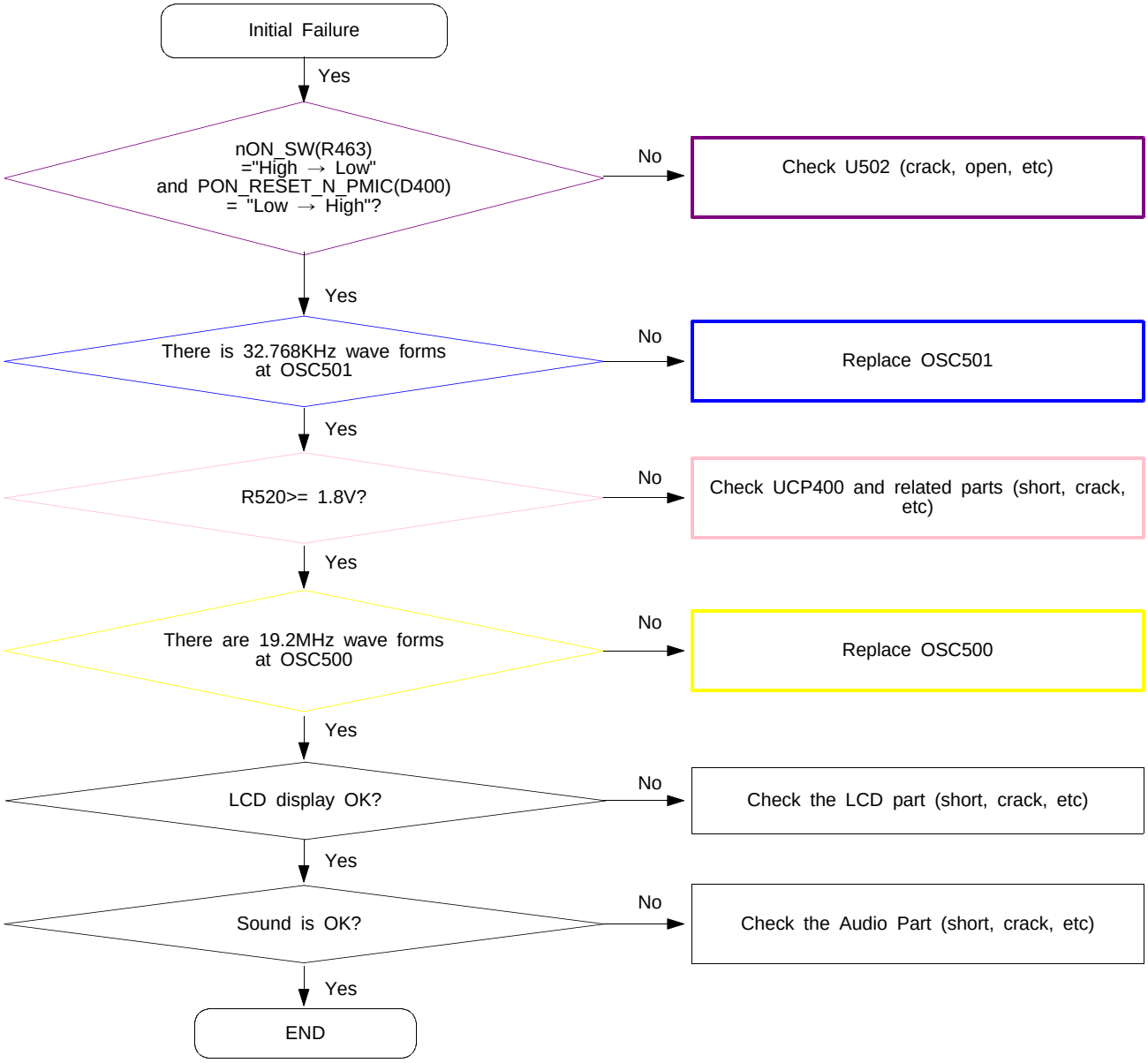




SAMSUNG Proprietary-Contents may change without notice
This Document can not be used without Samsung's authorization

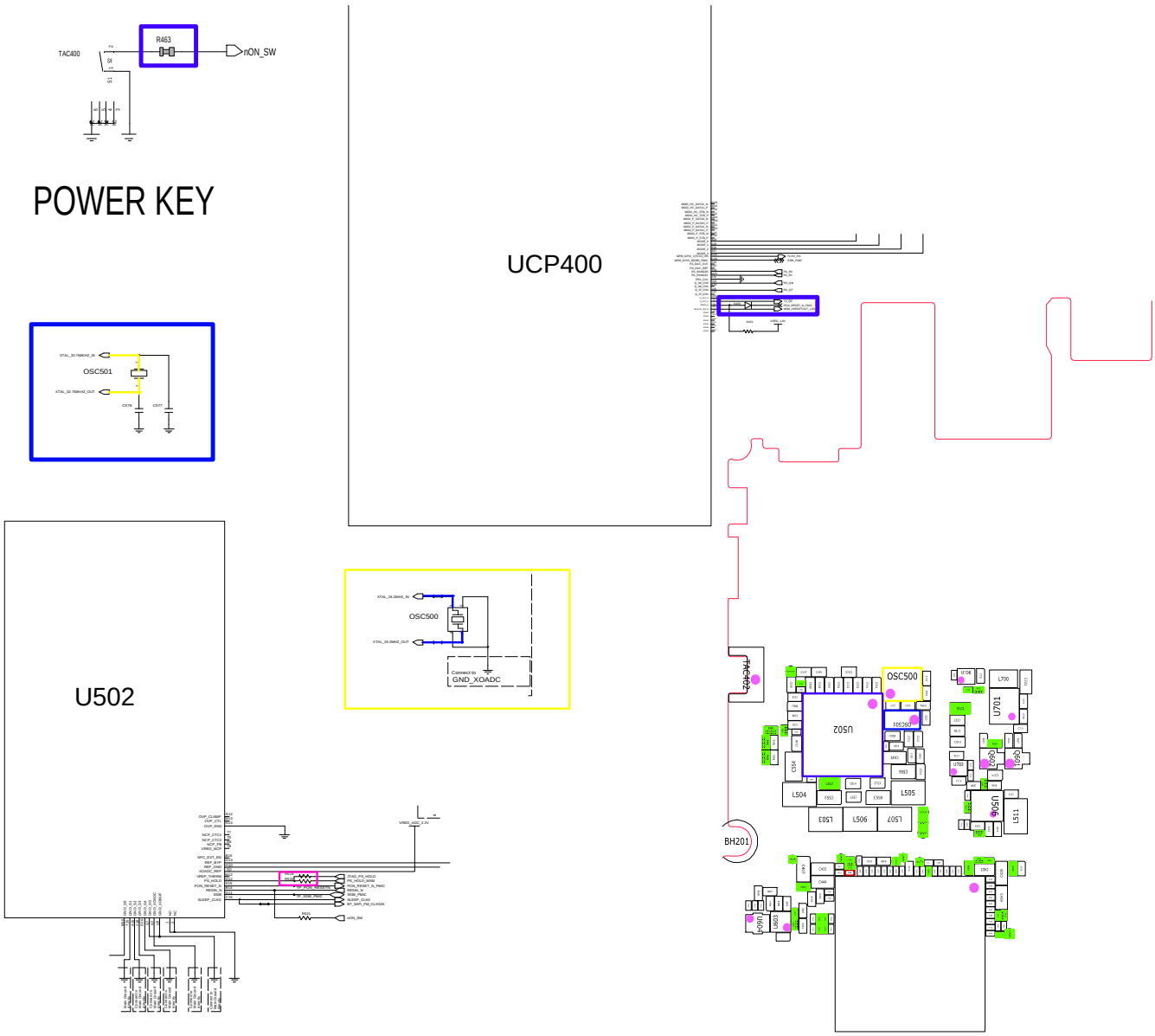




SAMSUNG Proprietary-Contents may change without notice
This Document can not be used without Samsung's authorization

## 8-3-3. Charging Part

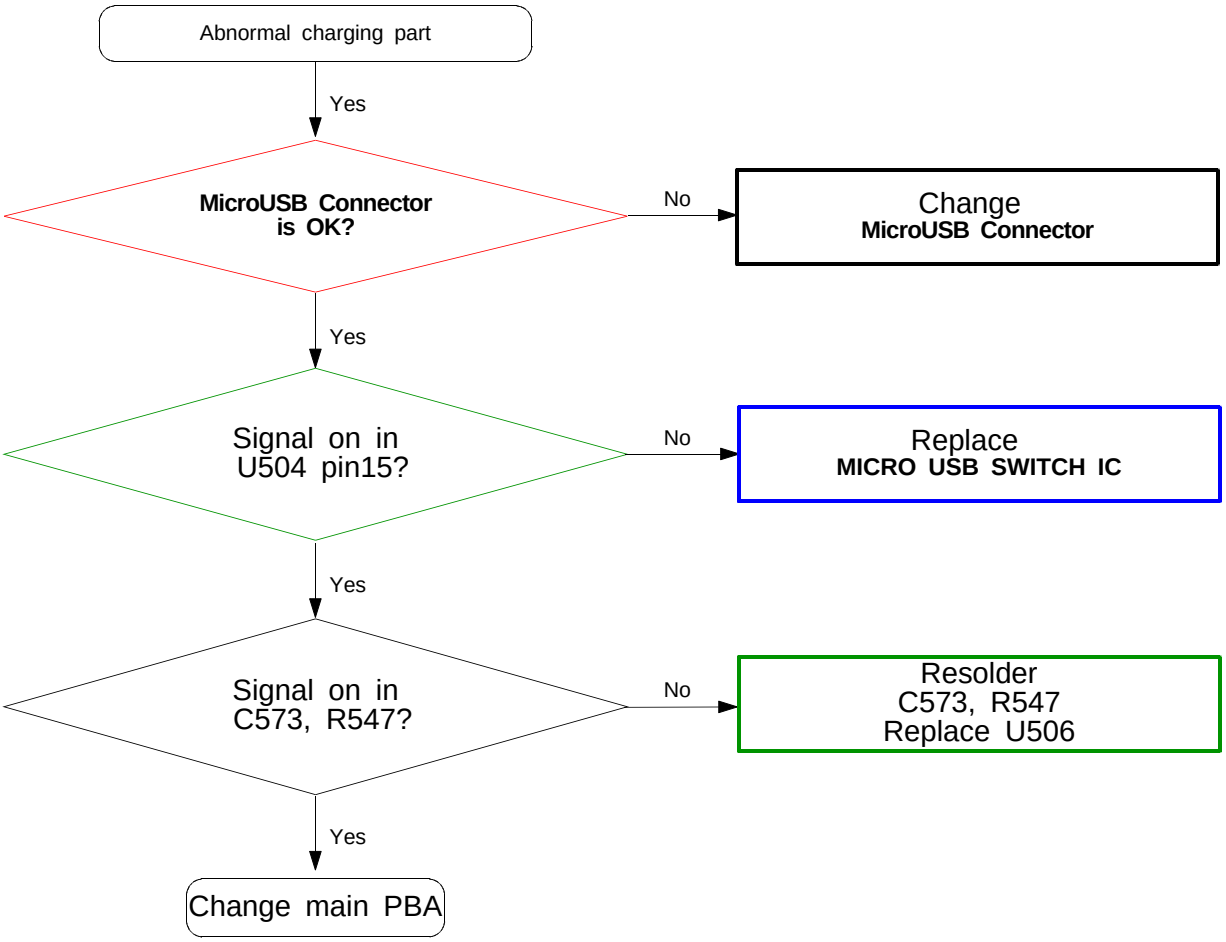




SAMSUNG Proprietary-Contents may change without notice
This Document can not be used without Samsung's authorization

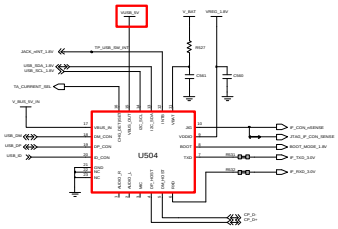

MICRO USB SWITCH IC

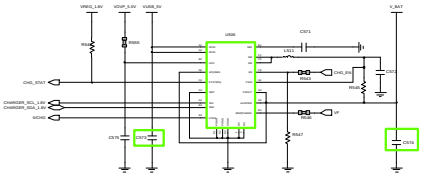

BATTERY CHARGER

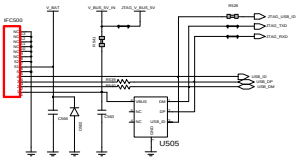

MicroUSB Connector

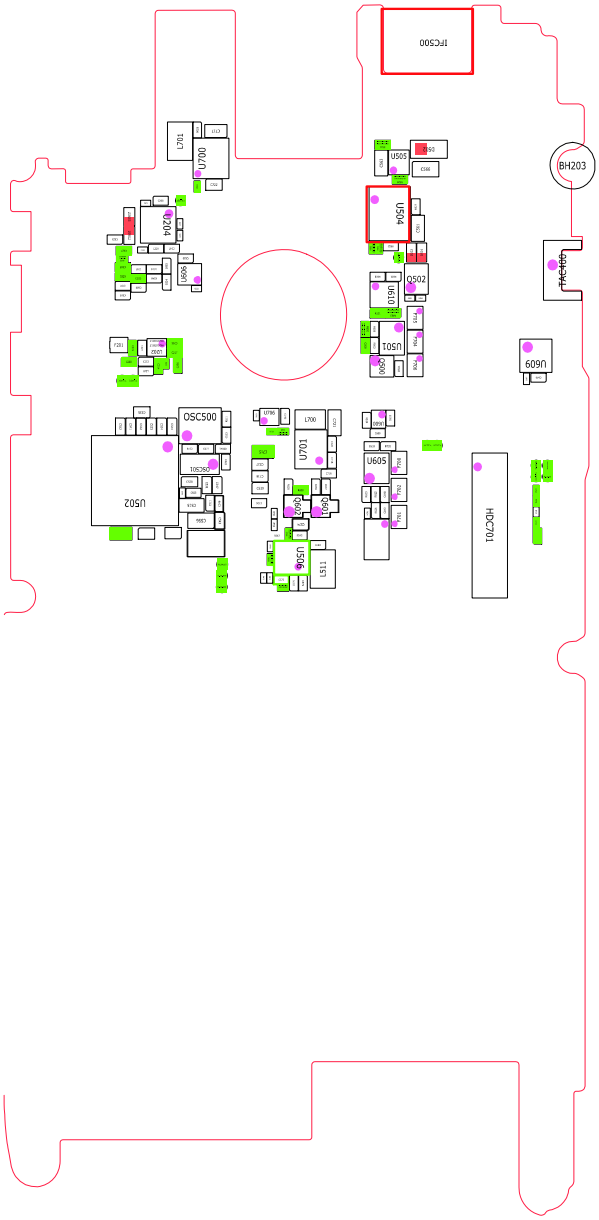



SAMSUNG Proprietary-Contents may change without notice
This Document can not be used without Samsung's authorization

## 8-3-4. Sim Part

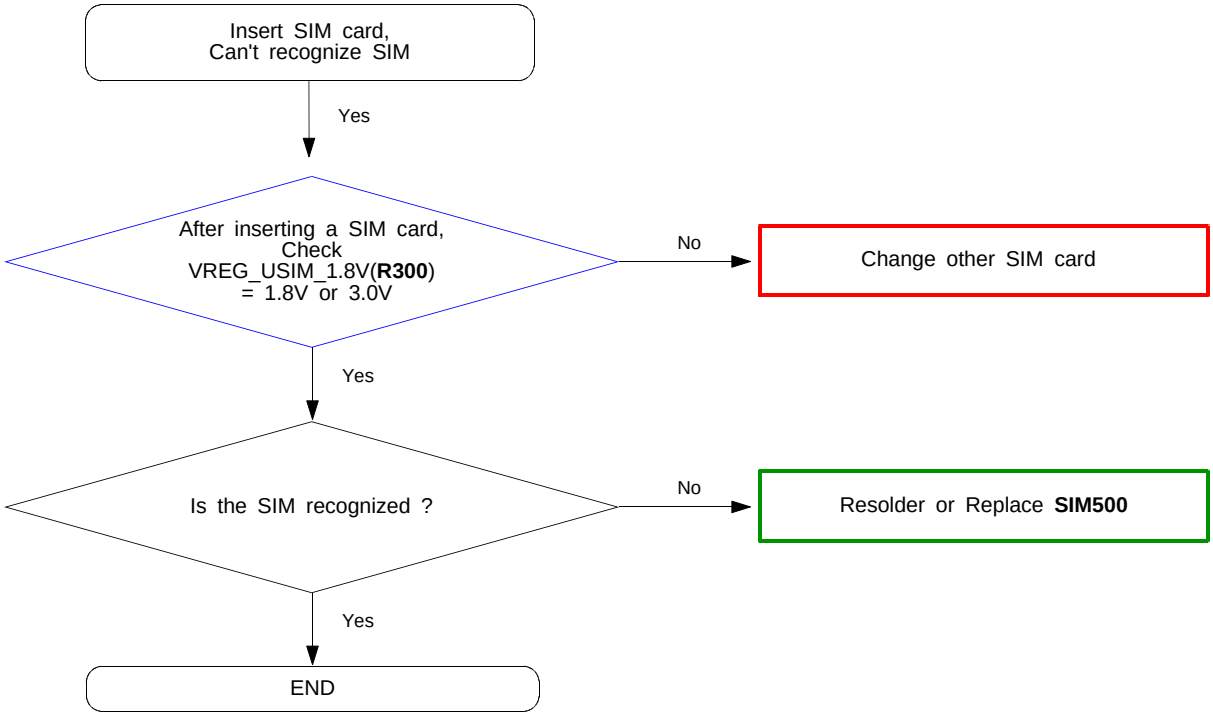




SAMSUNG Proprietary-Contents may change without notice
This Document can not be used without Samsung's authorization

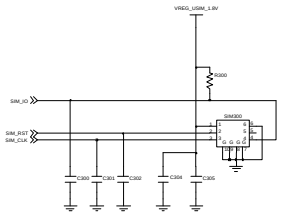


SIM CARD

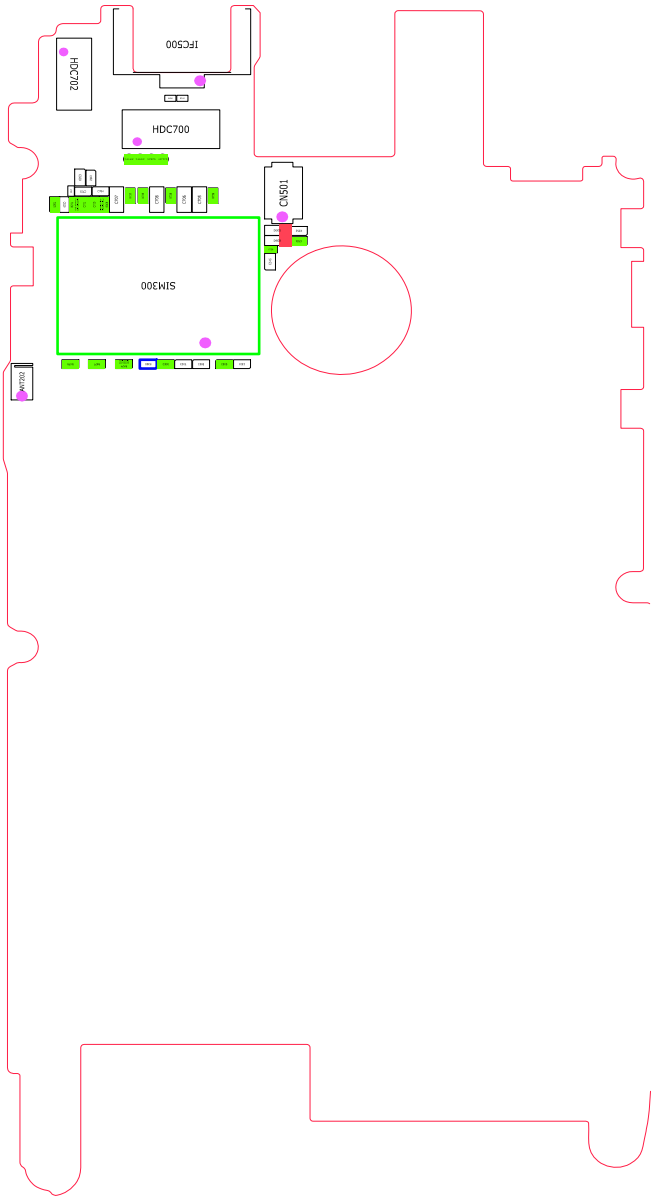




SAMSUNG Proprietary-Contents may change without notice
This Document can not be used without Samsung's authorization

## 8-3-4 T-Flash

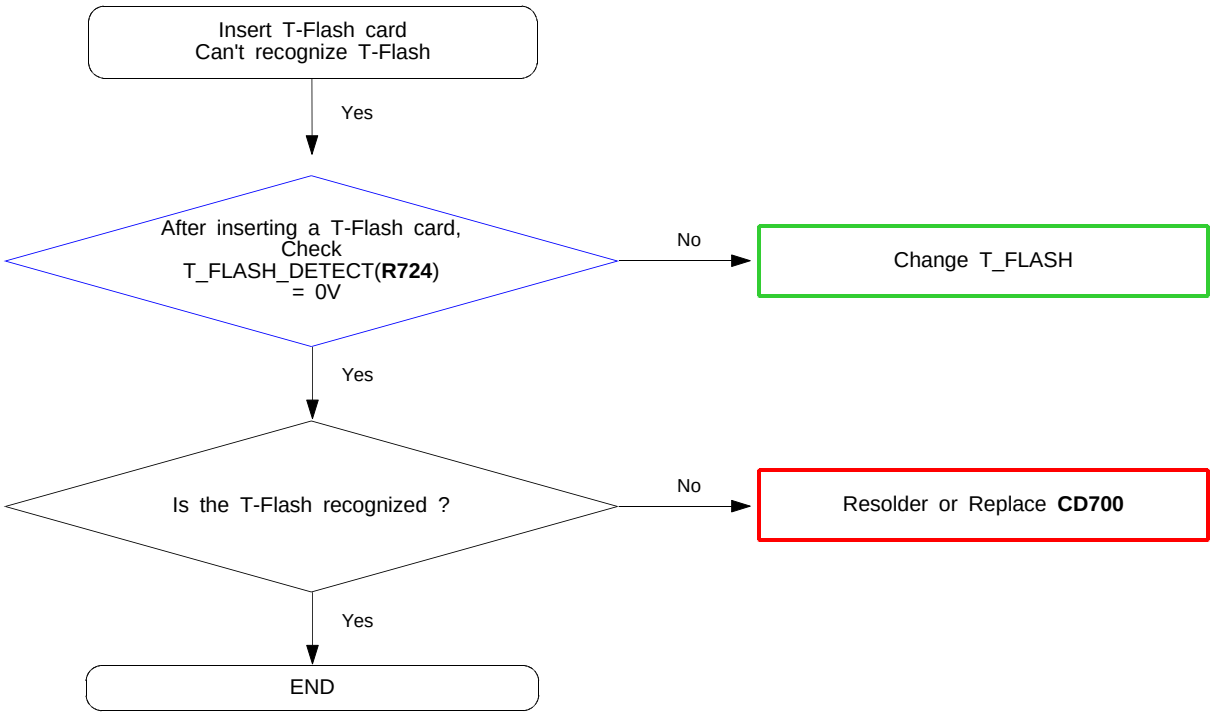




SAMSUNG Proprietary-Contents may change without notice
This Document can not be used without Samsung's authorization

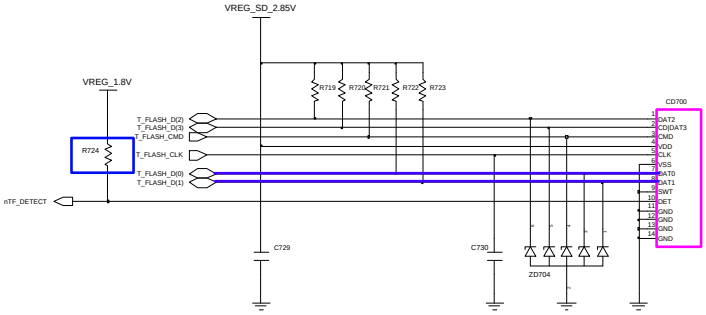


# T-FLASH Connector

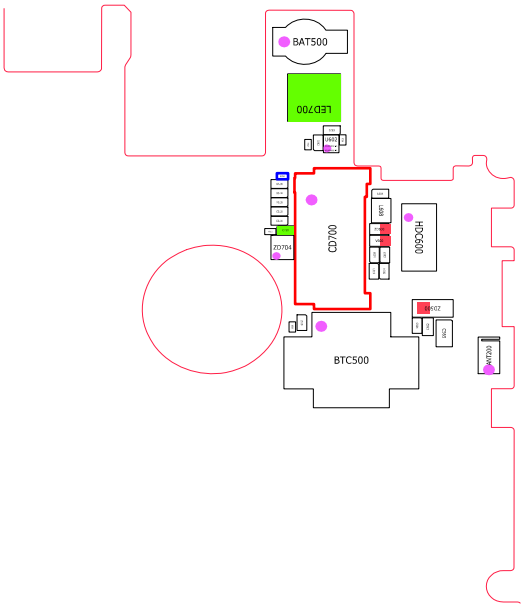




SAMSUNG Proprietary-Contents may change without notice
This Document can not be used without Samsung's authorization

## 8-3-5. Microphone Part (1)

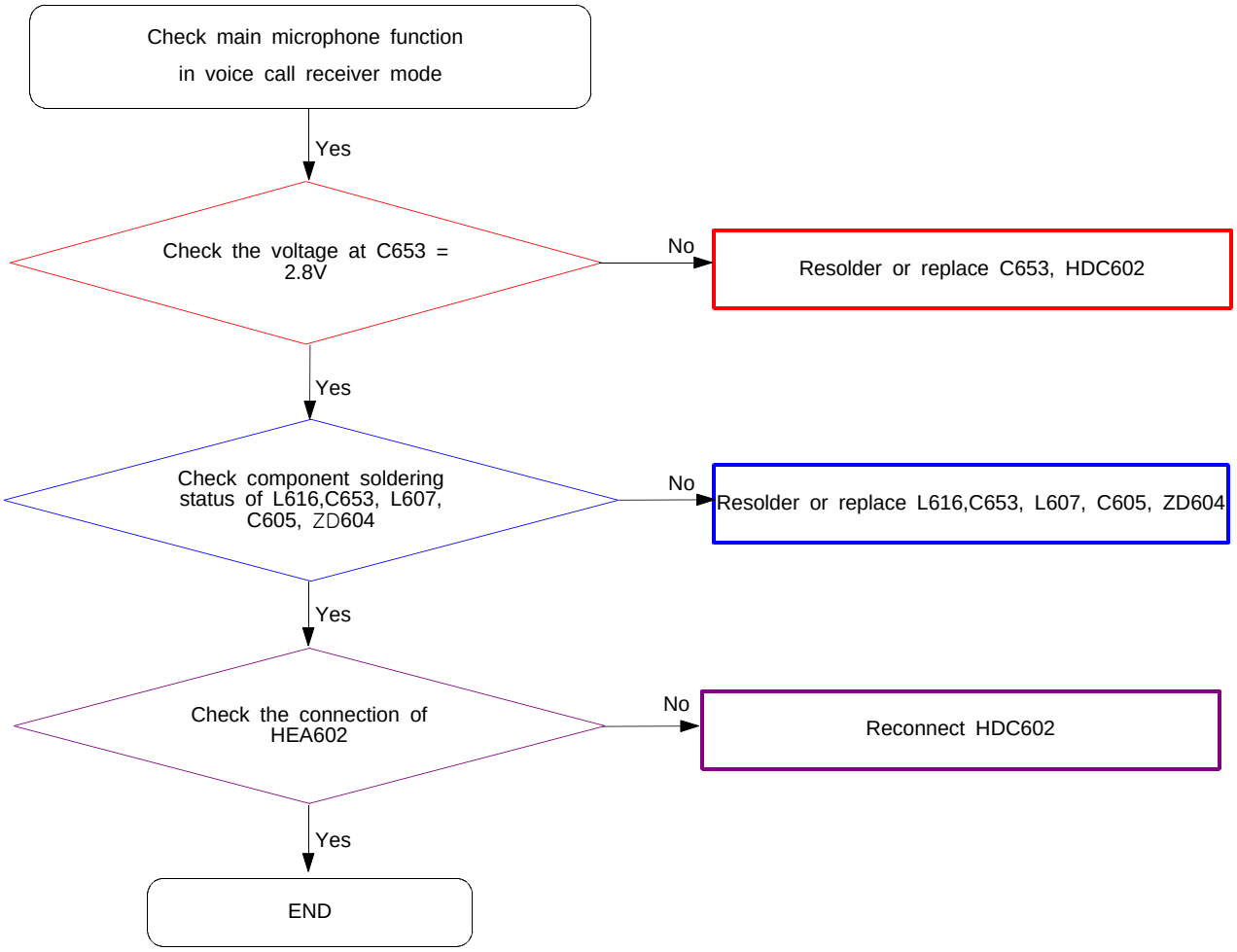




SAMSUNG Proprietary-Contents may change without notice
This Document can not be used without Samsung's authorization

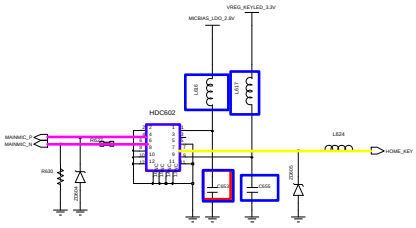


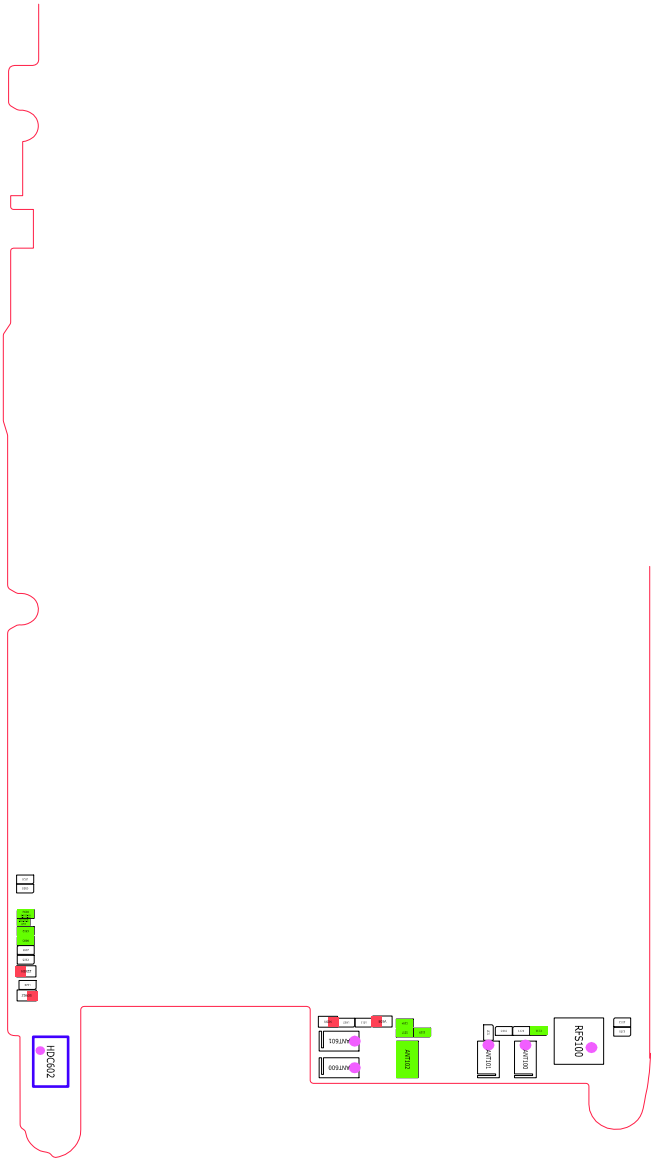




SAMSUNG Proprietary-Contents may change without notice
This Document can not be used without Samsung's authorization

## 8-3-5. Microphone Part (2)

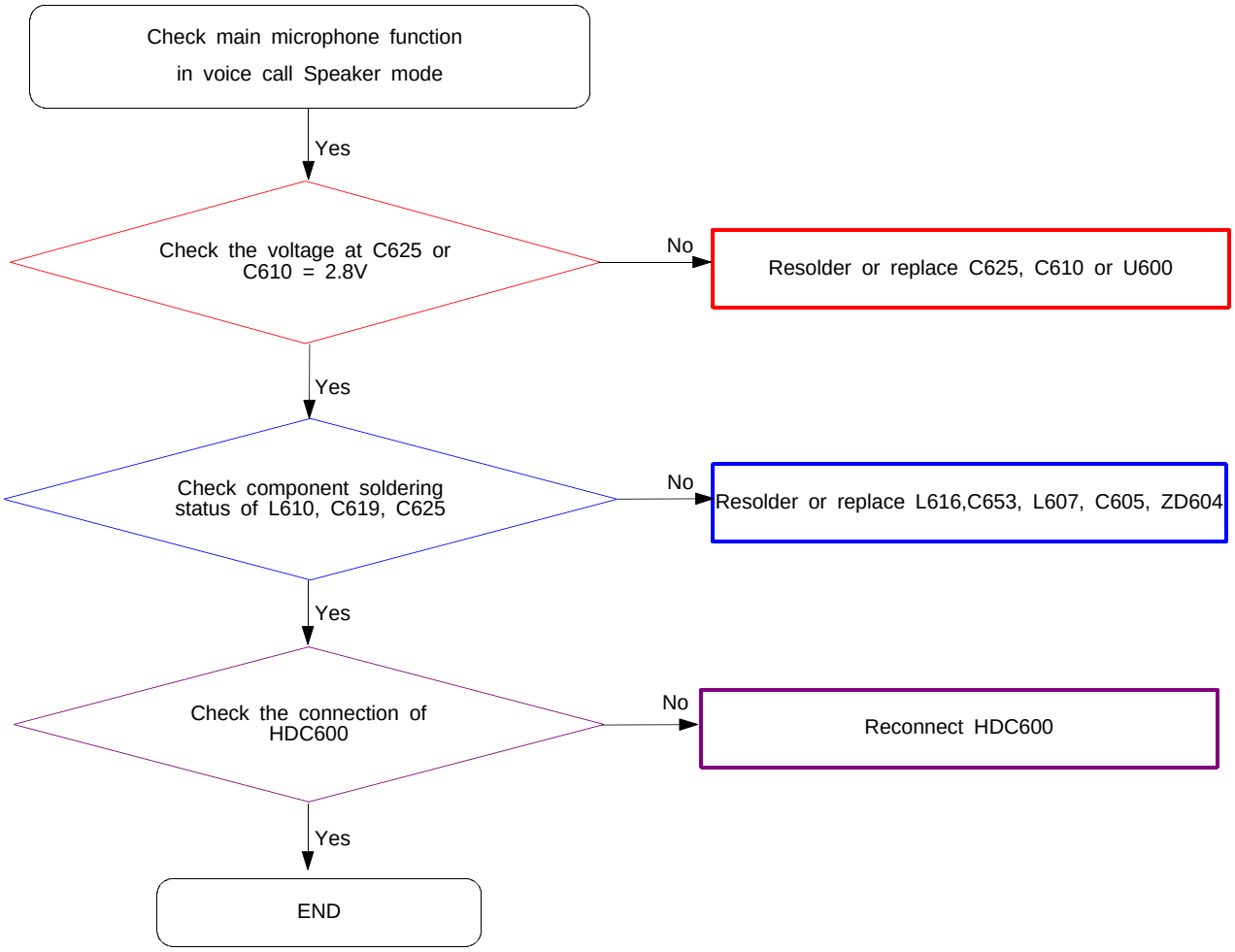




SAMSUNG Proprietary-Contents may change without notice
This Document can not be used without Samsung's authorization

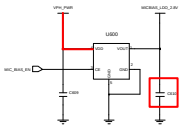

MAIN MIC BIAS

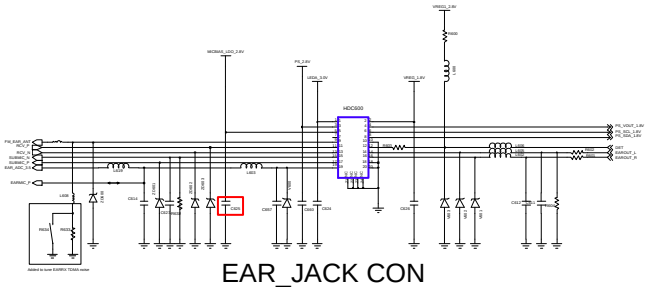

EAR_JACK CON

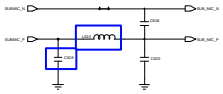

SUB MIC (MEMS)

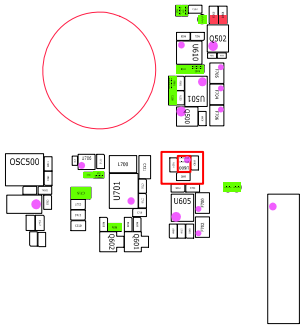


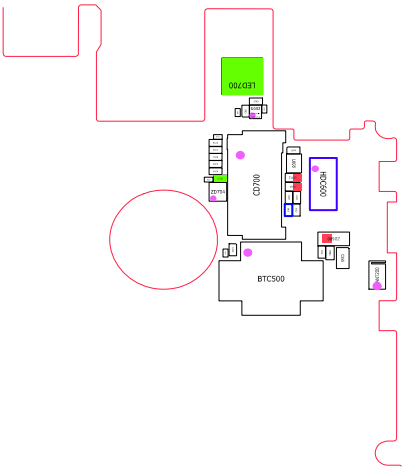




SAMSUNG Proprietary-Contents may change without notice
This Document can not be used without Samsung's authorization

## 6. Speaker Part

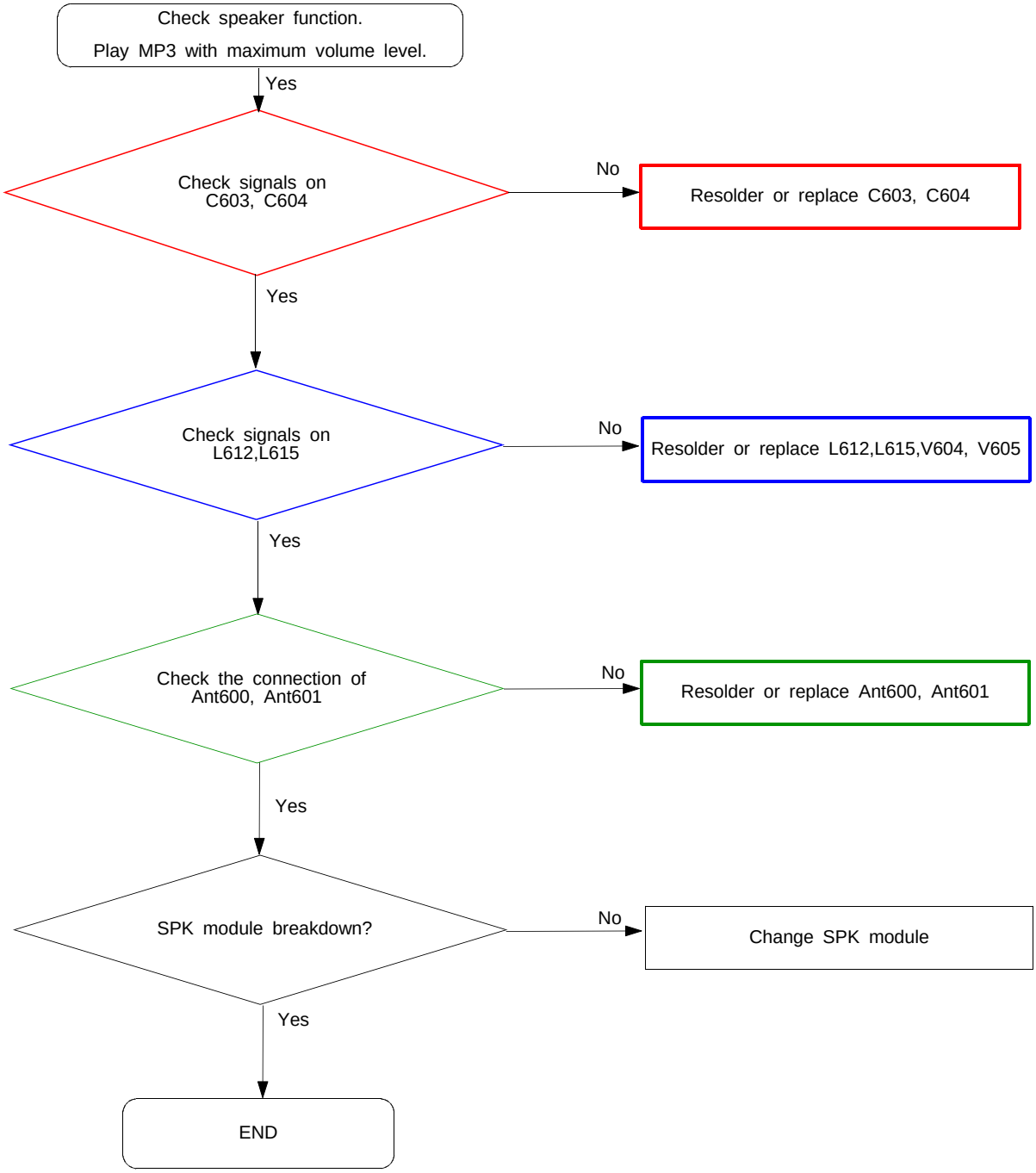




SAMSUNG Proprietary-Contents may change without notice
This Document can not be used without Samsung's authorization

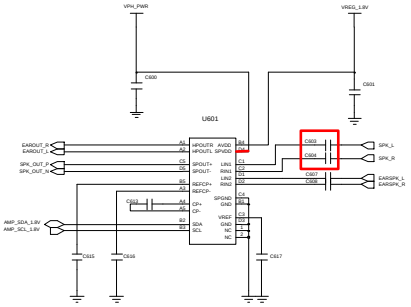


< AUDIO AMP - YDA165 >

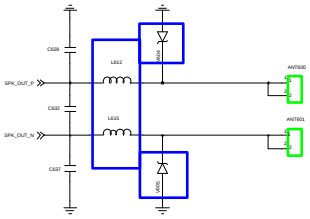


SPEAKER Contact

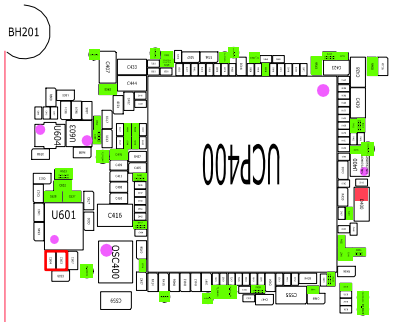


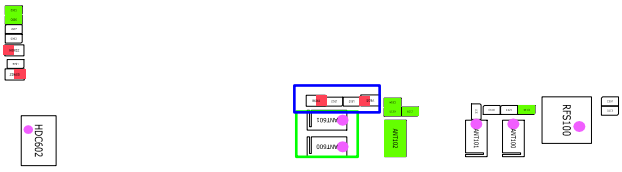




SAMSUNG Proprietary-Contents may change without notice
This Document can not be used without Samsung's authorization

## 8-3-7. Receiver Part

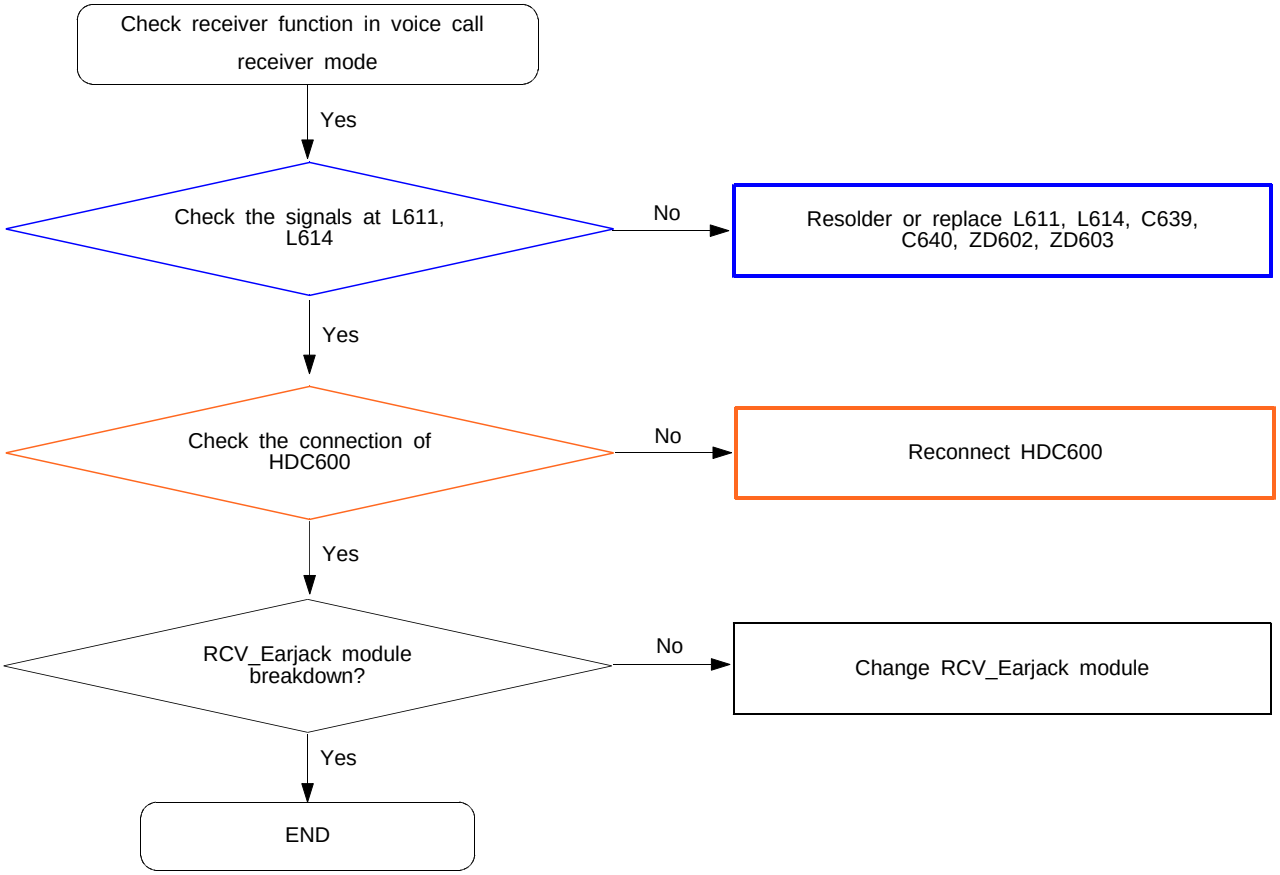




SAMSUNG Proprietary-Contents may change without notice
This Document can not be used without Samsung's authorization

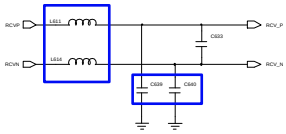


RECEIVER PATH

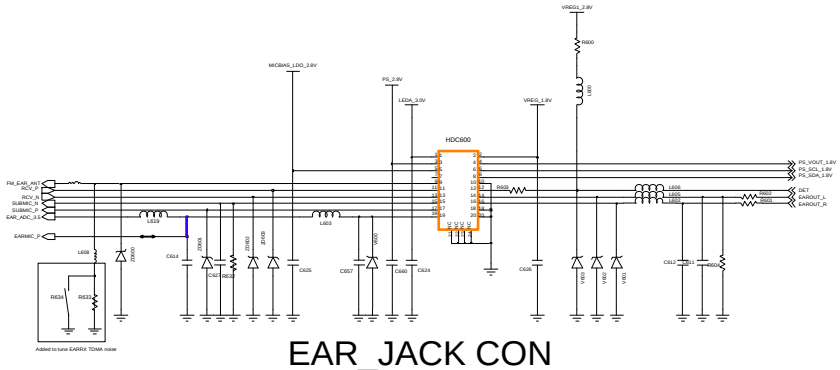


EAR_JACK CON

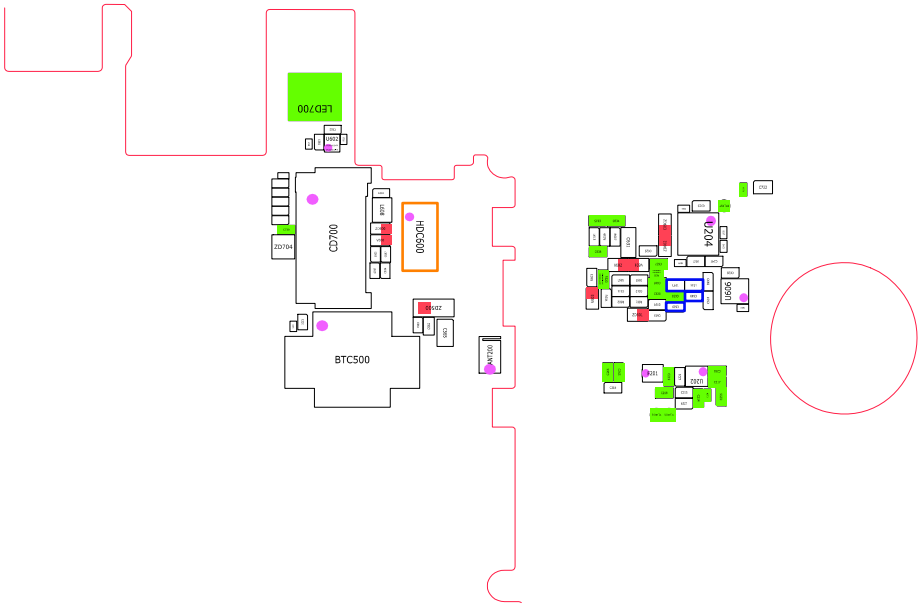




SAMSUNG Proprietary-Contents may change without notice
This Document can not be used without Samsung's authorization

## 8-3-8. KEY Function (volume key/ power key)

### - volume key

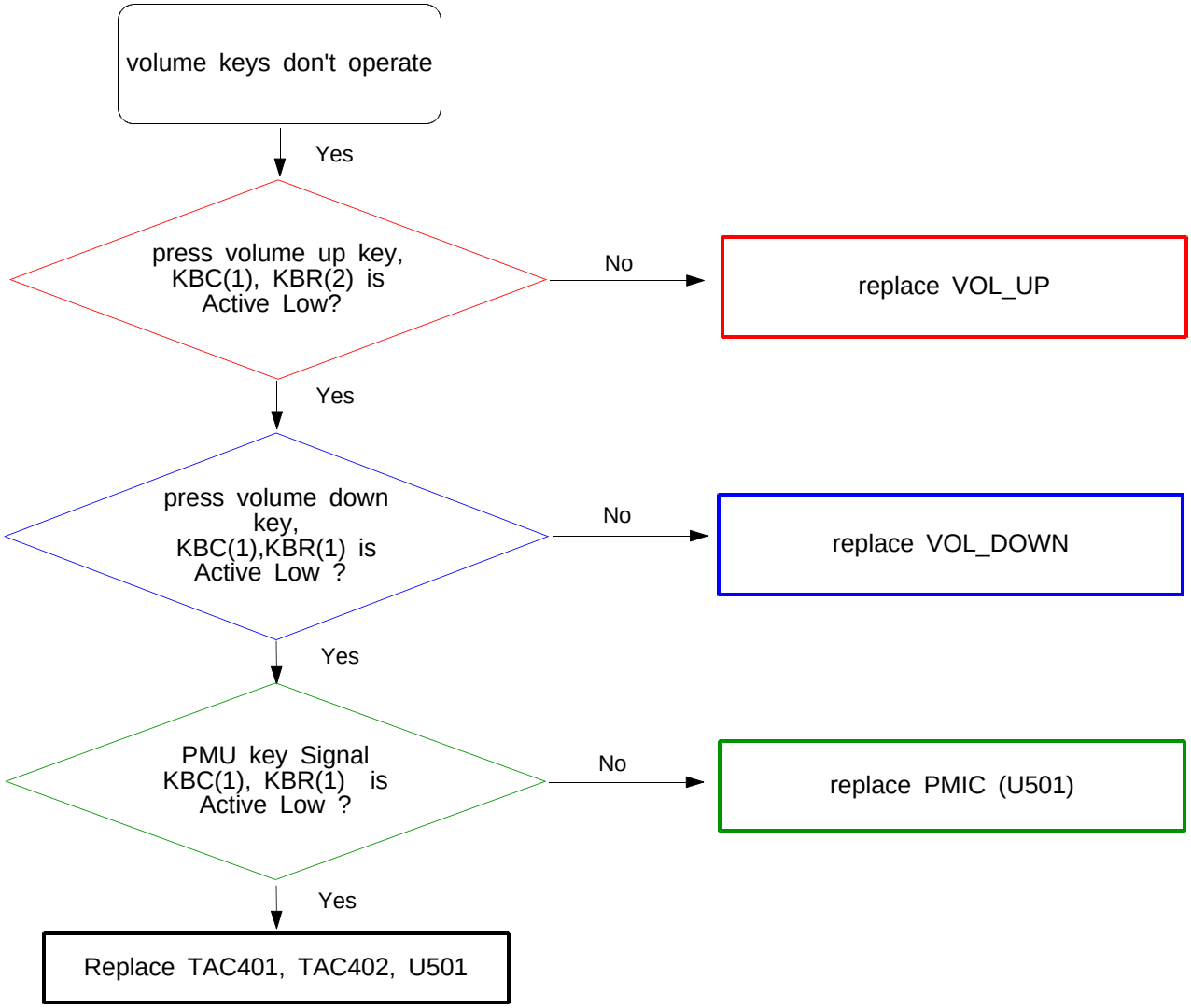




SAMSUNG Proprietary-Contents may change without notice
This Document can not be used without Samsung's authorization

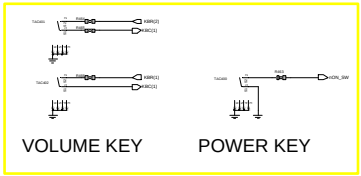


KEY MAP

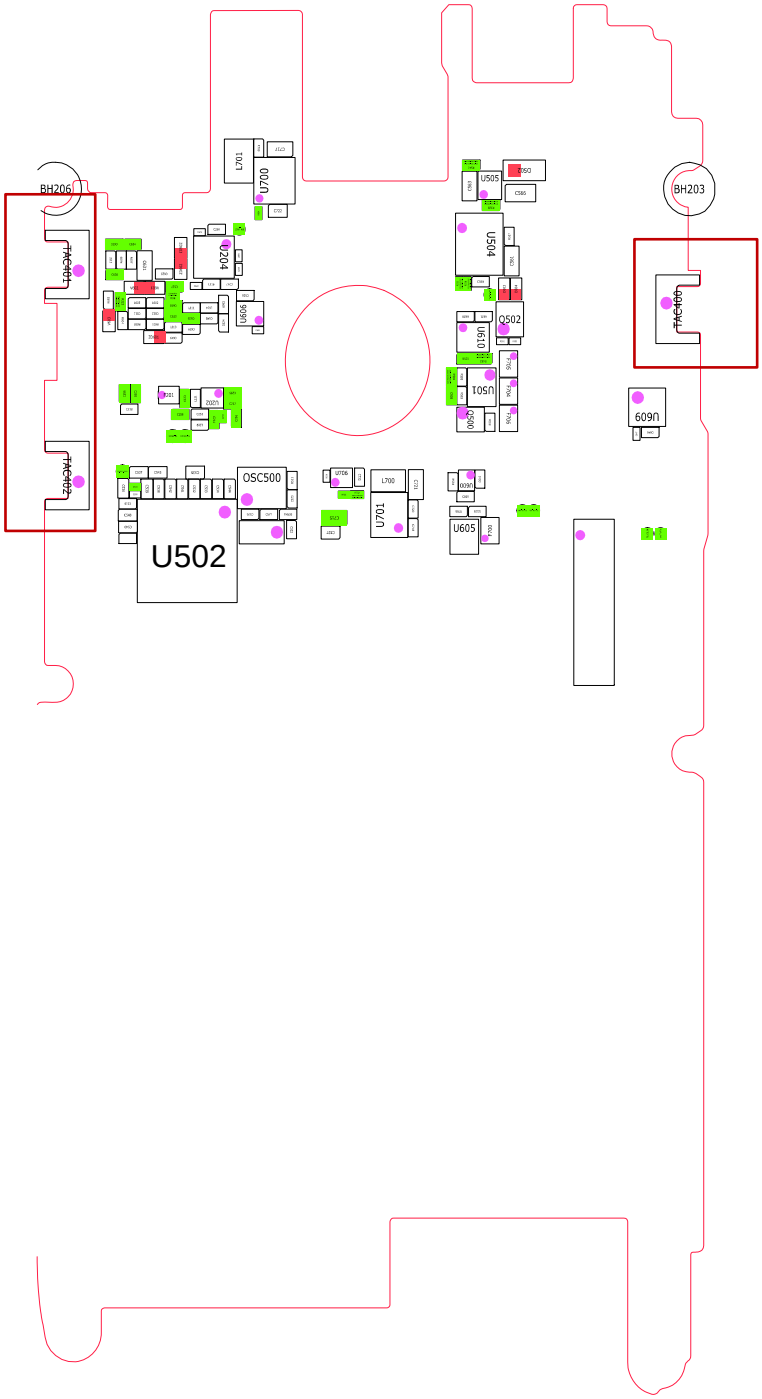




SAMSUNG Proprietary-Contents may change without notice
This Document can not be used without Samsung's authorization

## 8-3-9. BT/WIFI

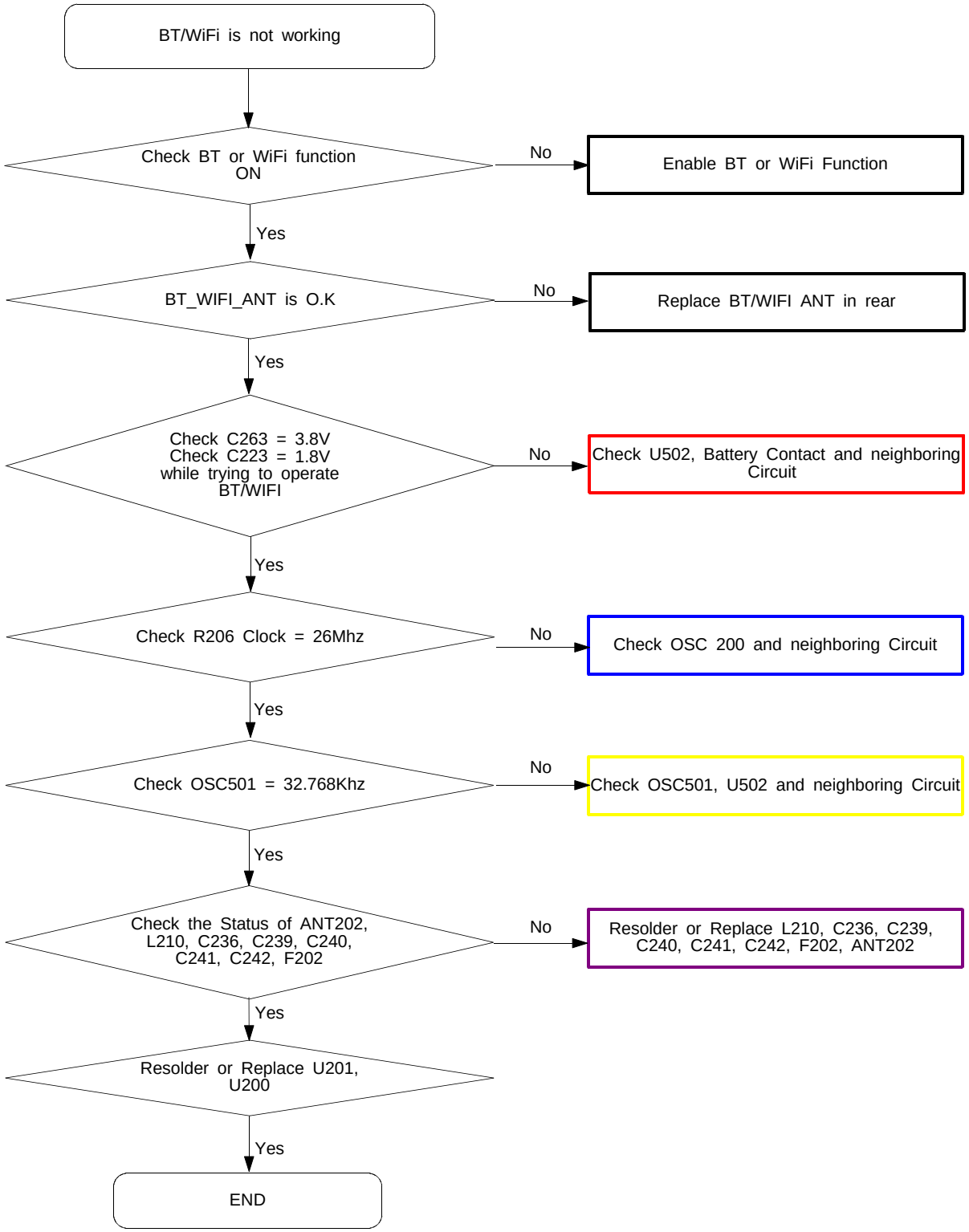




SAMSUNG Proprietary-Contents may change without notice
This Document can not be used without Samsung's authorization

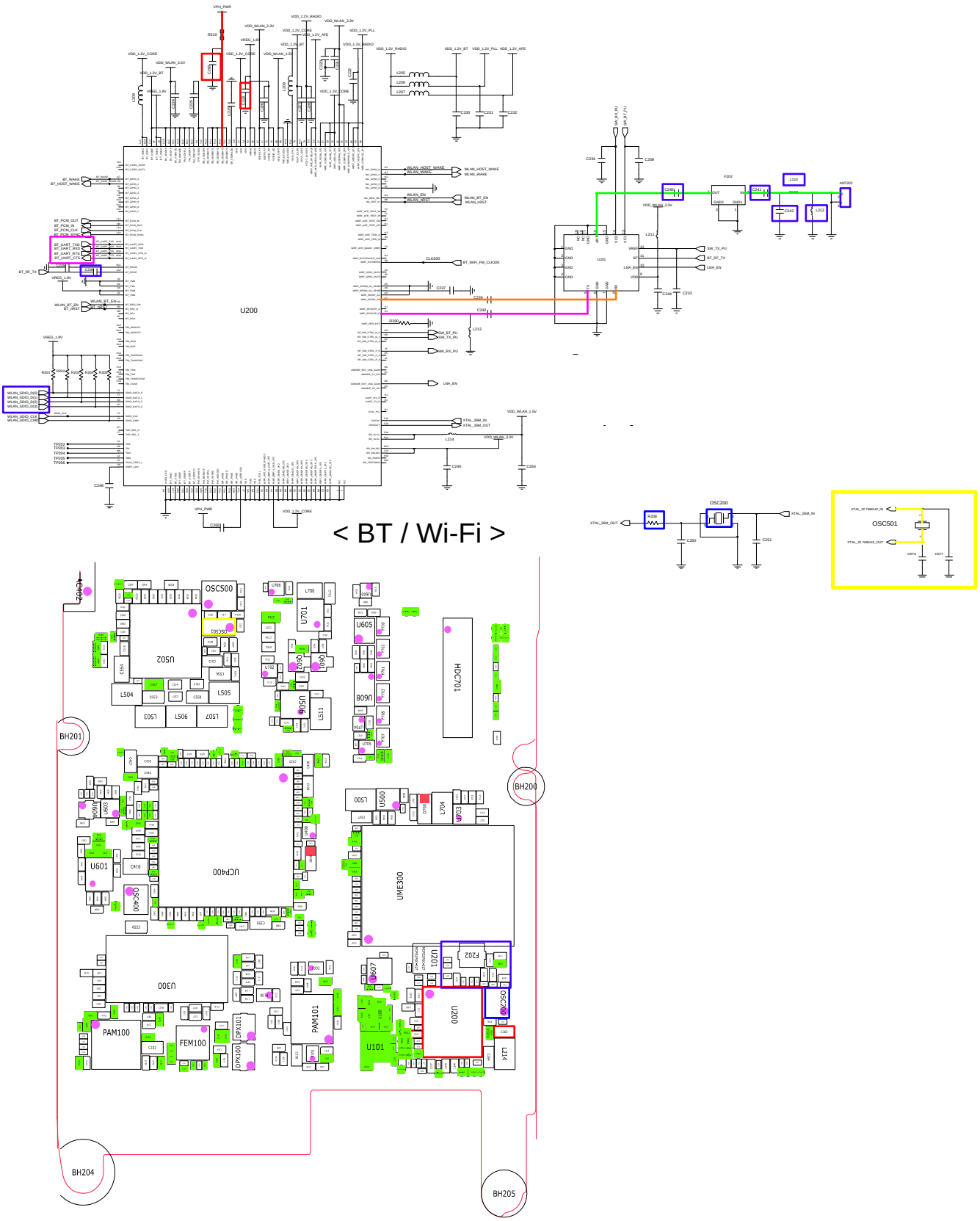




SAMSUNG Proprietary-Contents may change without notice
This Document can not be used without Samsung's authorization

## 8-3-10. FM RADIO

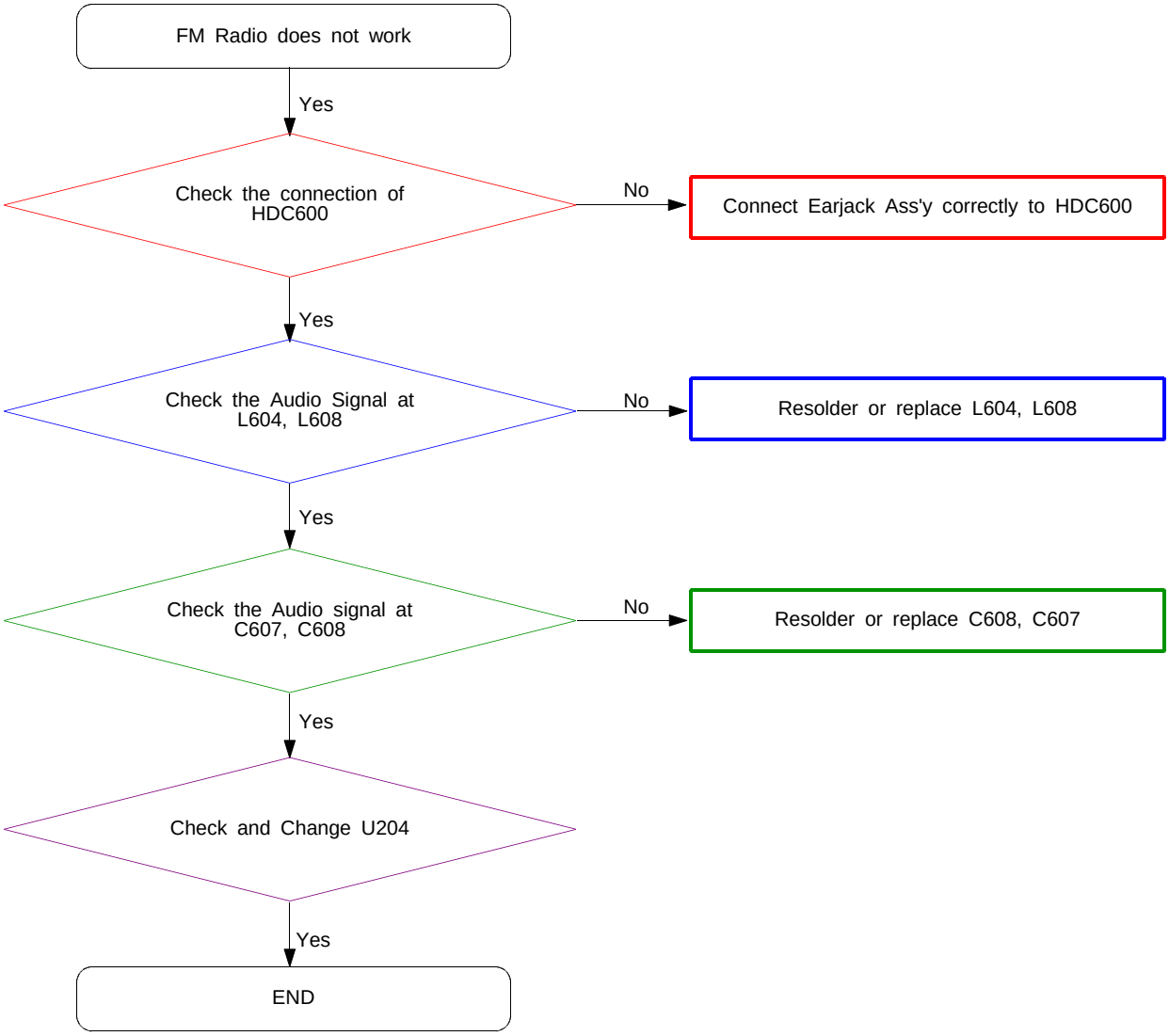




SAMSUNG Proprietary-Contents may change without notice
This Document can not be used without Samsung's authorization

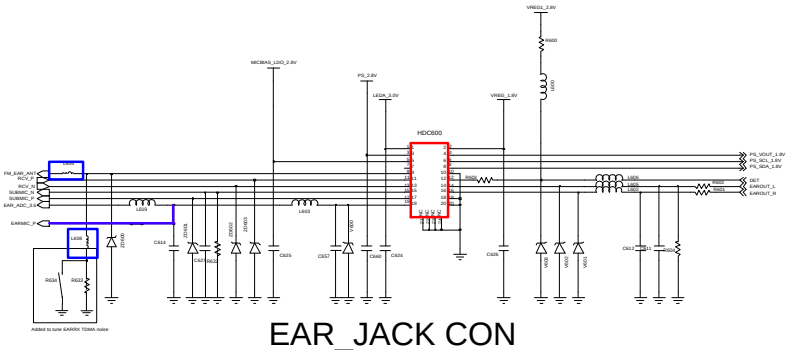

EAR_JACK CON

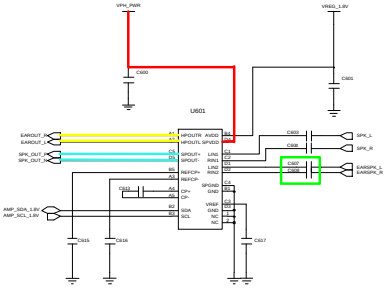

< AUDIO AMP - YDA165 >

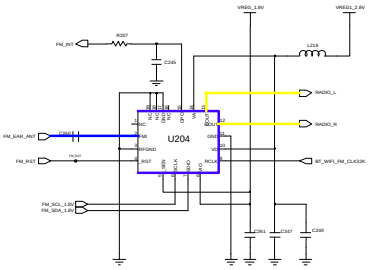

FM RADIO(SI4709)

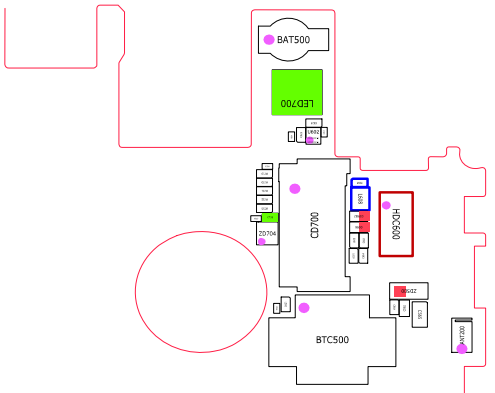

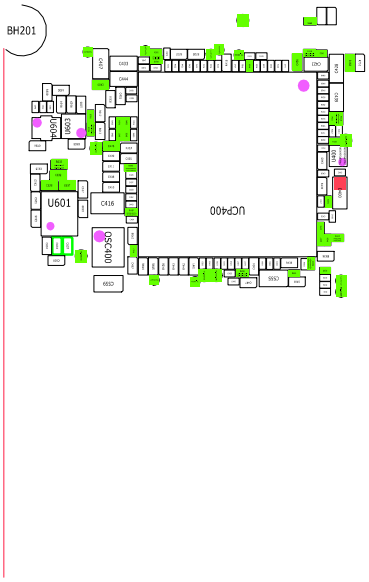

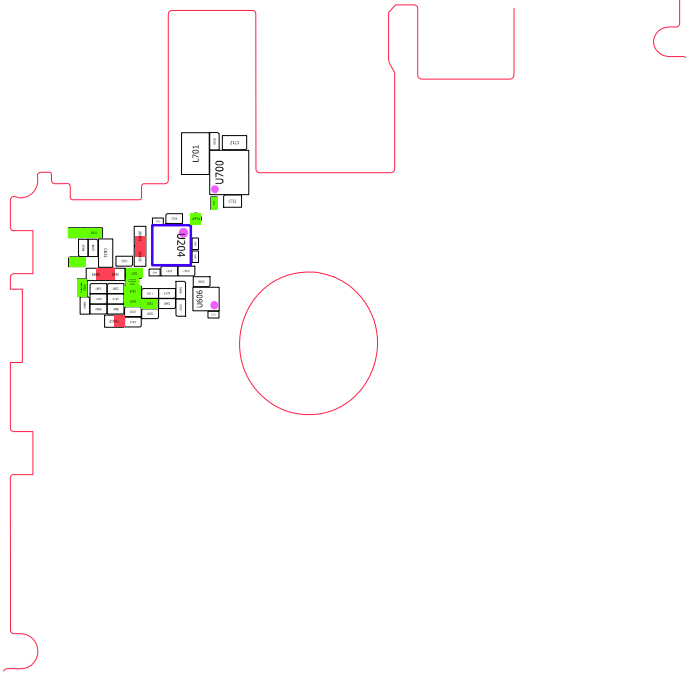



SAMSUNG Proprietary-Contents may change without notice
This Document can not be used without Samsung's authorization

## 8-3-11. TSP

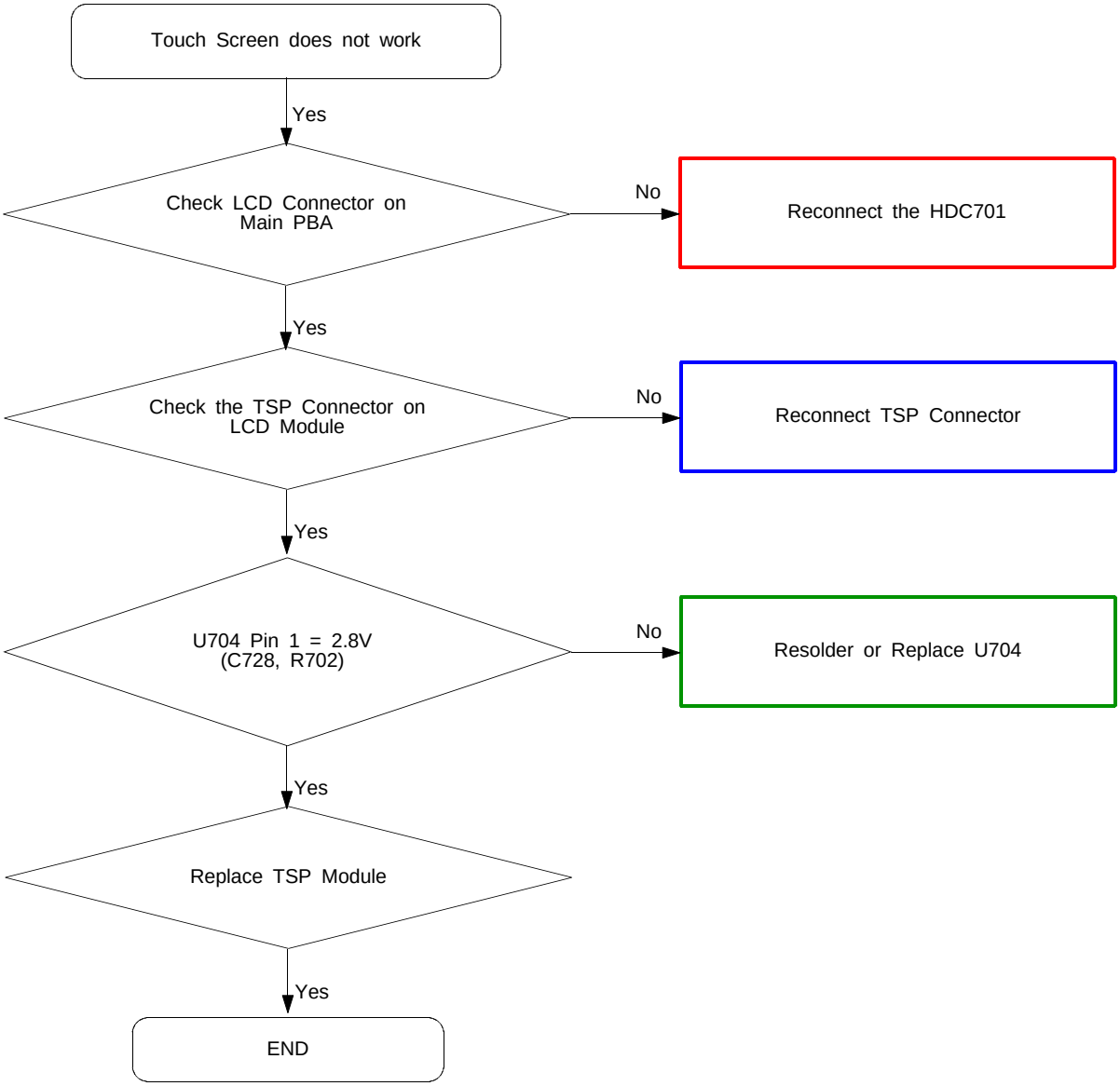




SAMSUNG Proprietary-Contents may change without notice
This Document can not be used without Samsung's authorization

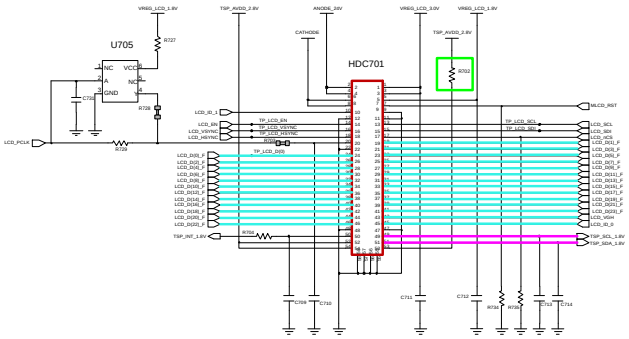


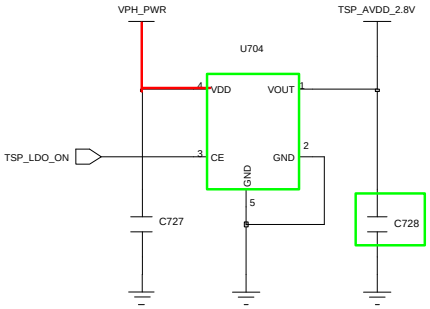


3.7" LCD Connector

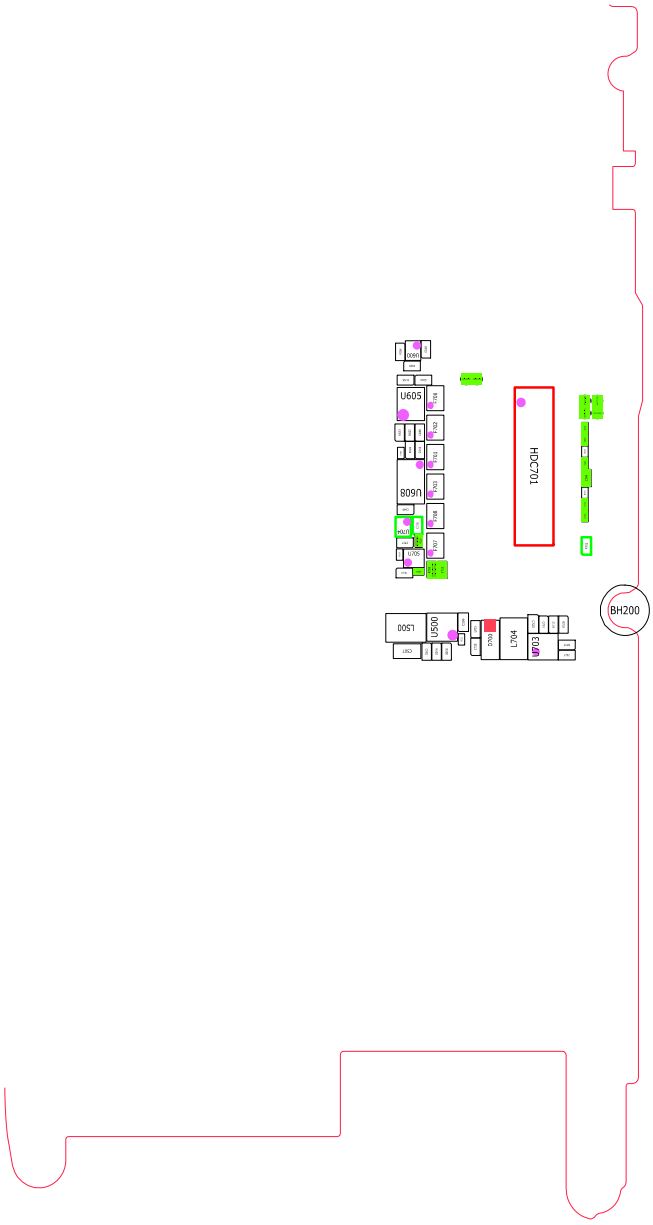




SAMSUNG Proprietary-Contents may change without notice
This Document can not be used without Samsung's authorization

## 8-3-12. LCD

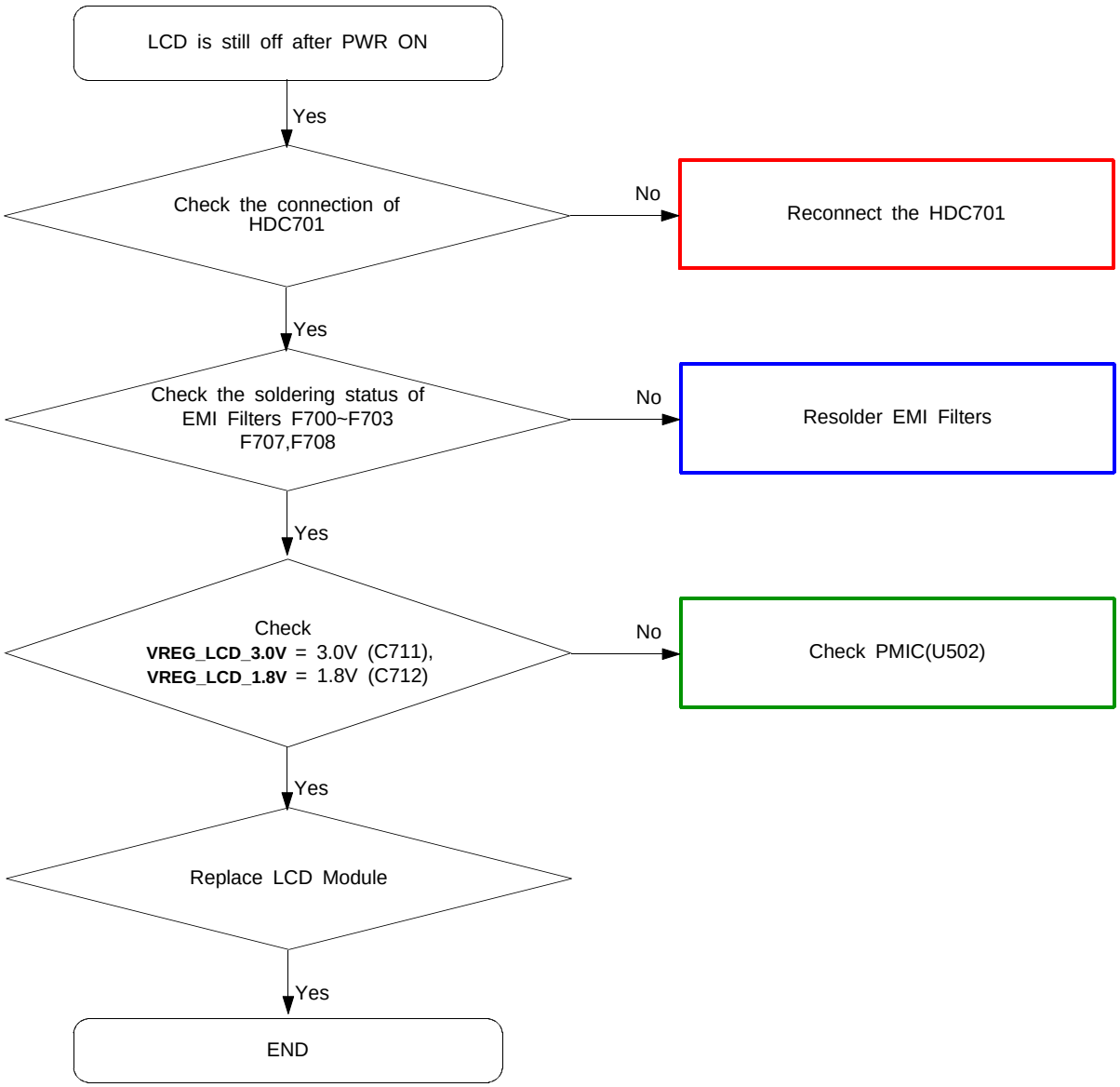




SAMSUNG Proprietary-Contents may change without notice
This Document can not be used without Samsung's authorization

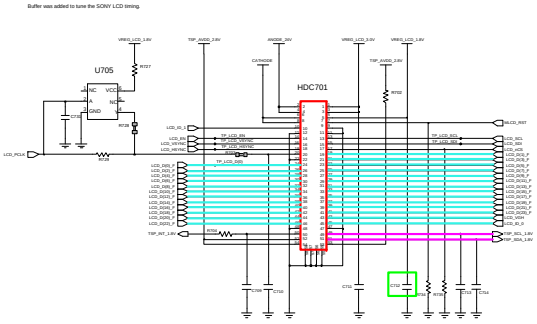


3.7" LCD Connector

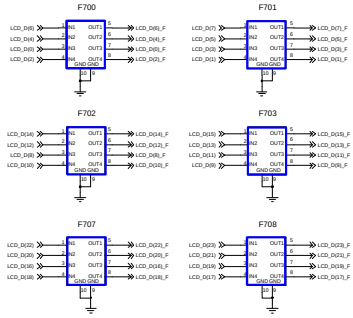


LCD EMI_FILTER

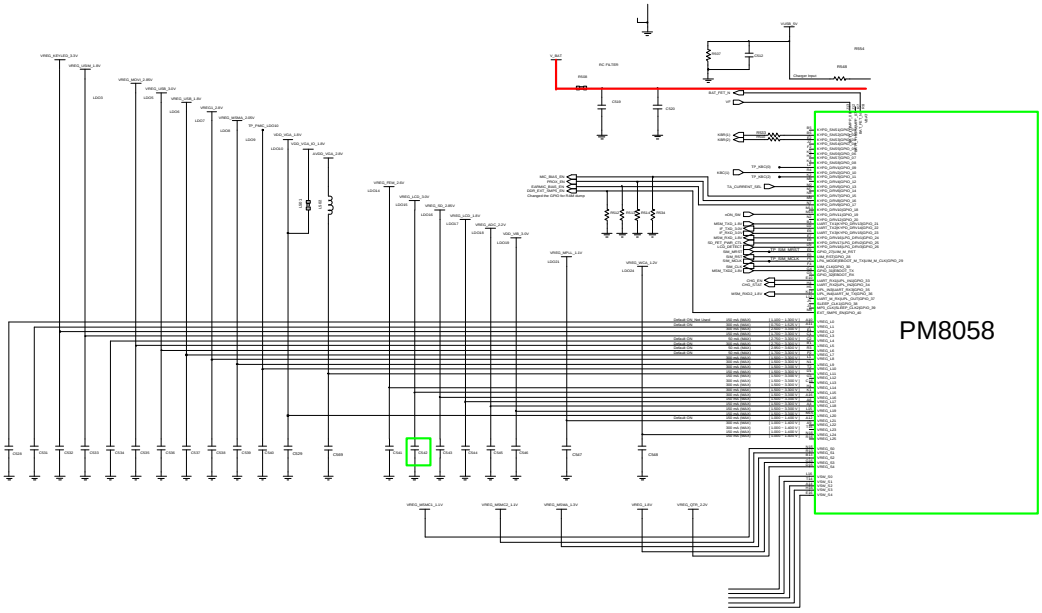


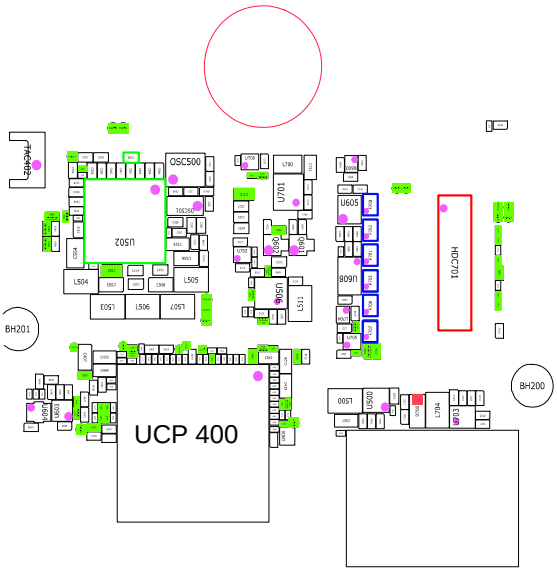




SAMSUNG Proprietary-Contents may change without notice
This Document can not be used without Samsung's authorization

## 8-3-13. 5M CAM

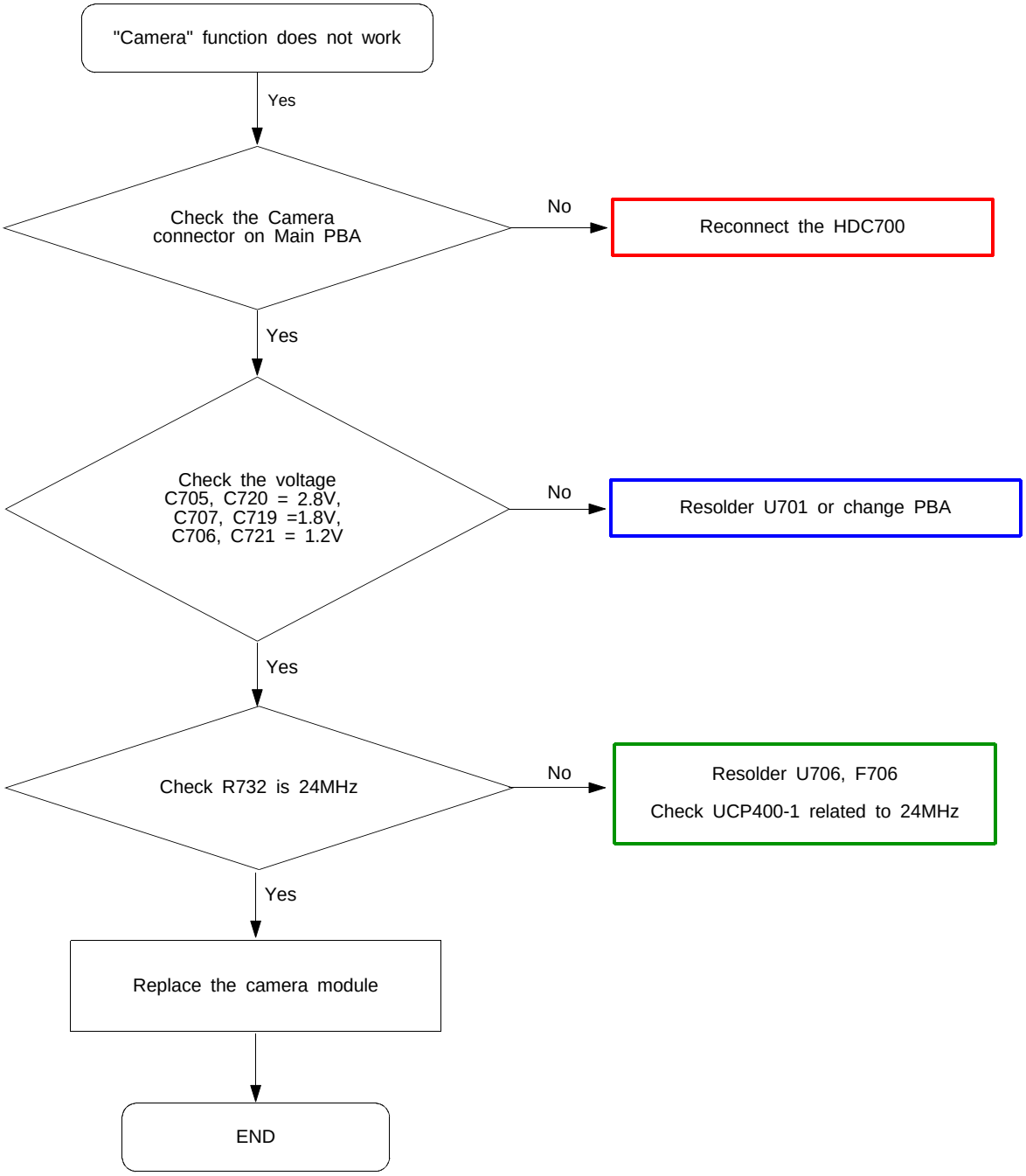




SAMSUNG Proprietary-Contents may change without notice
This Document can not be used without Samsung's authorization

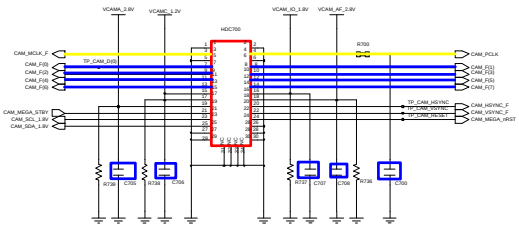

5M SOC_CAMERA

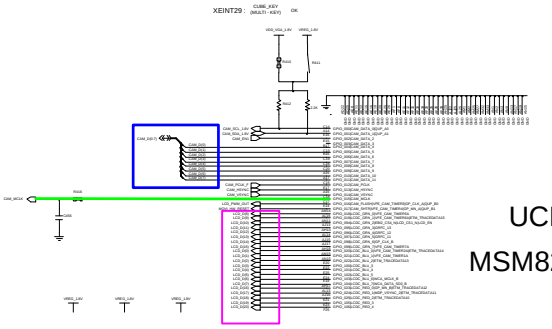

UCP400-1

MSM8255-0-AB

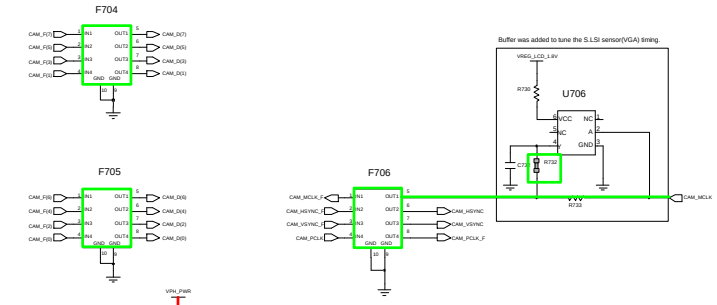


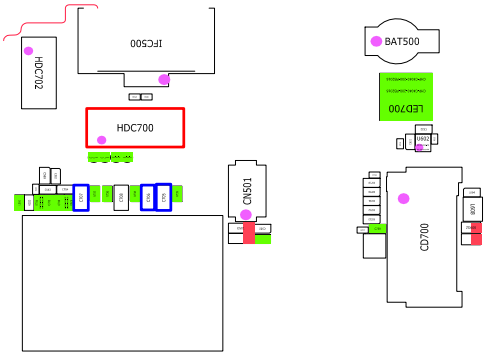


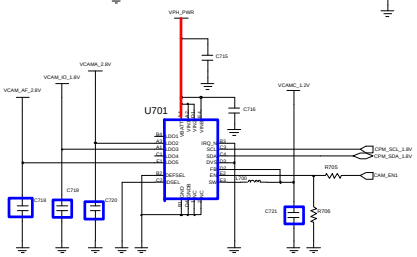


< CAM PMIC & LDOs >

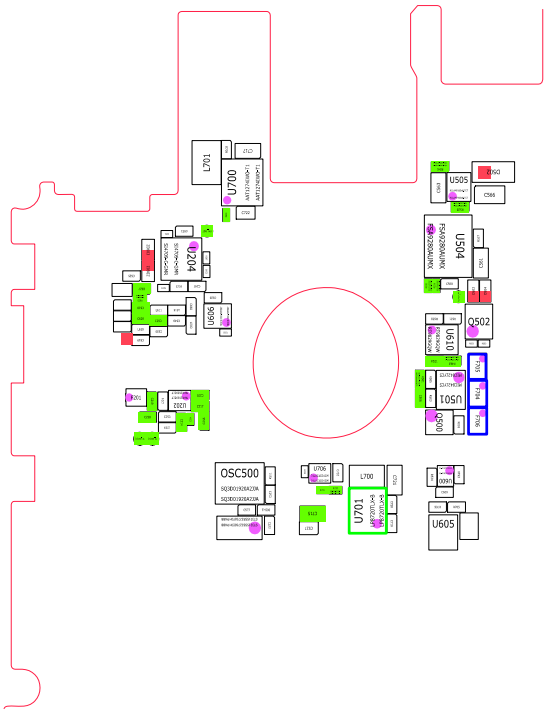




SAMSUNG Proprietary-Contents may change without notice
This Document can not be used without Samsung's authorization

## 8-3-14. GSM850 RX

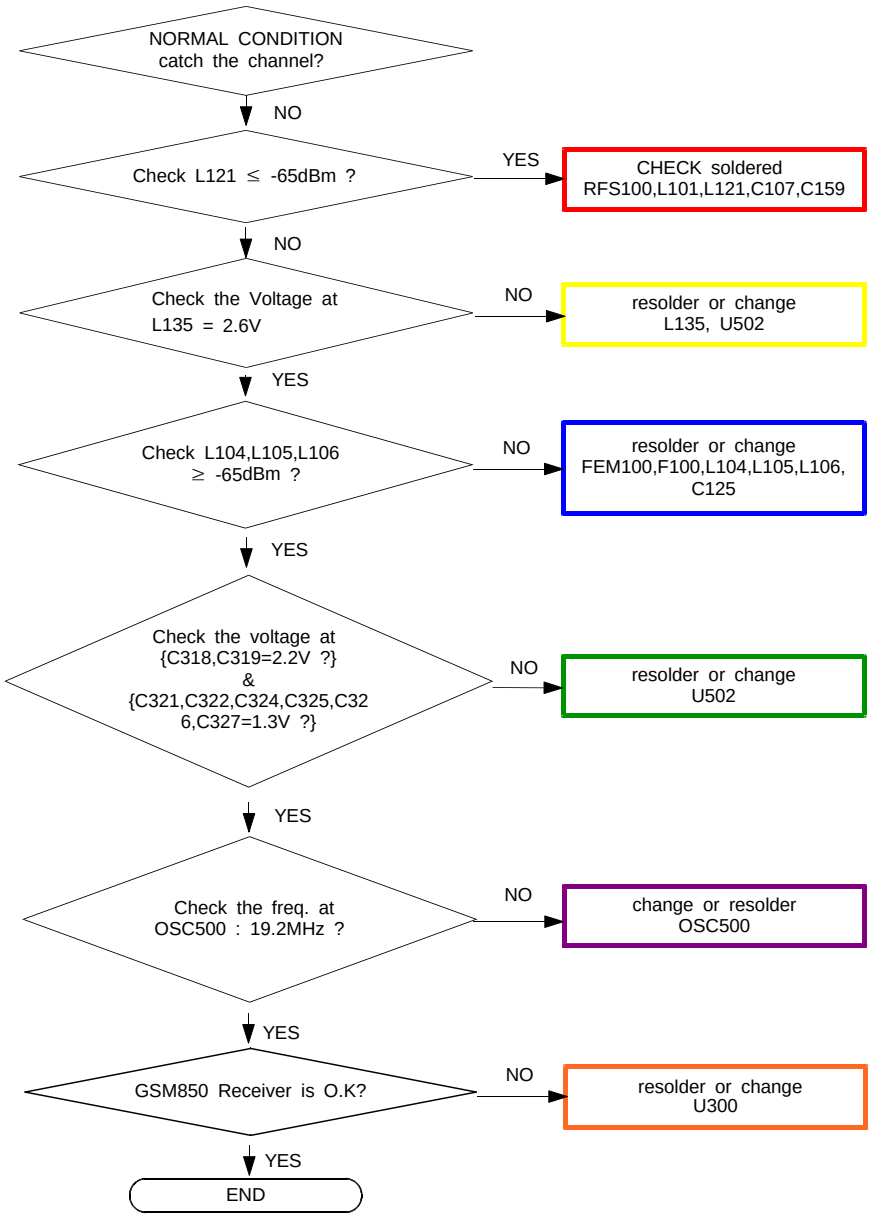




SAMSUNG Proprietary-Contents may change without notice
This Document can not be used without Samsung's authorization

SAMSUNG Proprietary-Contents may change without notice
This Document can not be used without Samsung's authorization

## 8-3-15. GSM1800, GSM1900 RX

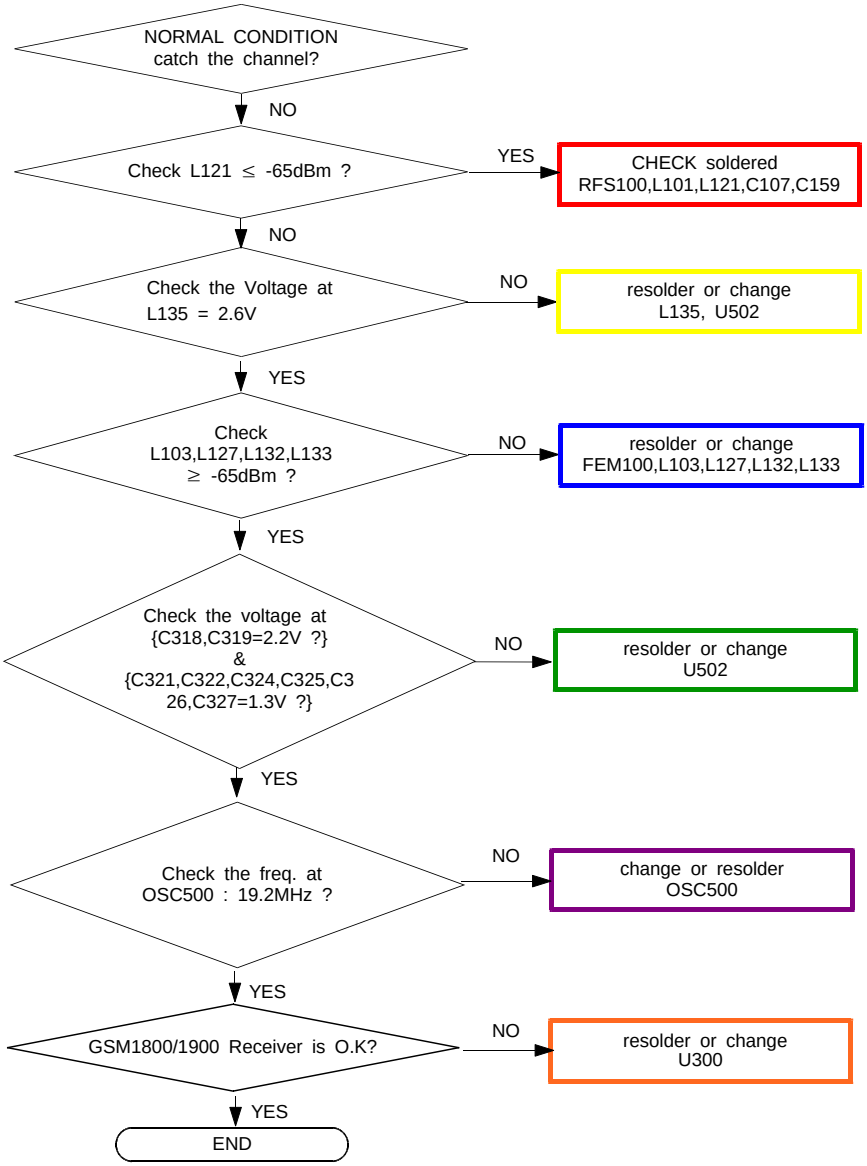




SAMSUNG Proprietary-Contents may change without notice
This Document can not be used without Samsung's authorization

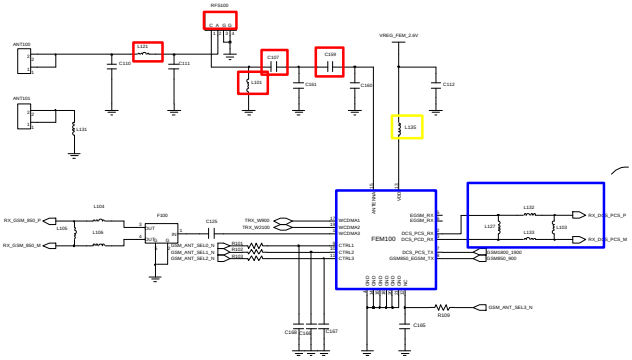


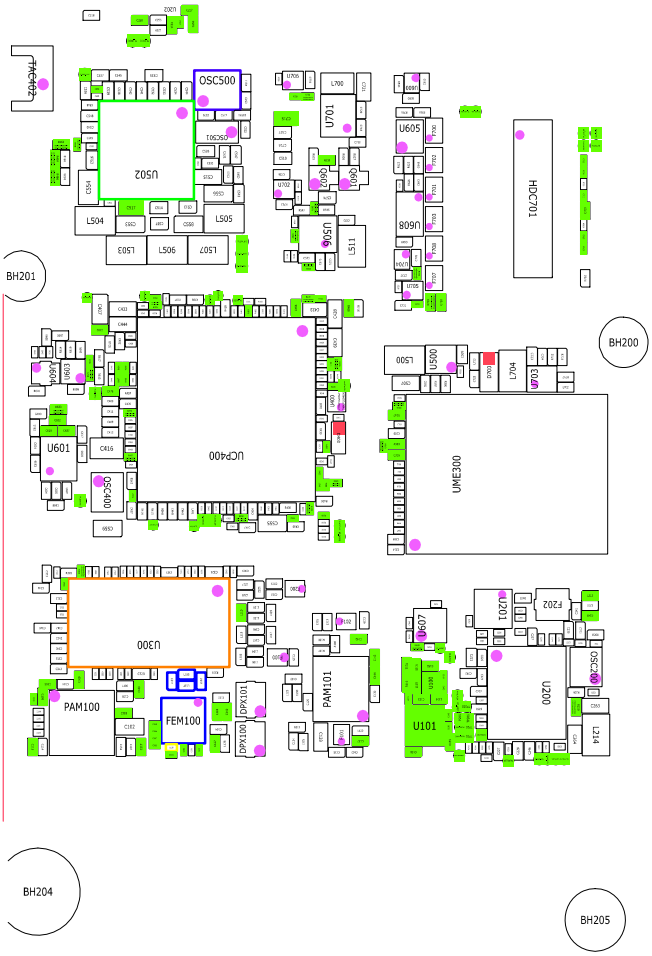


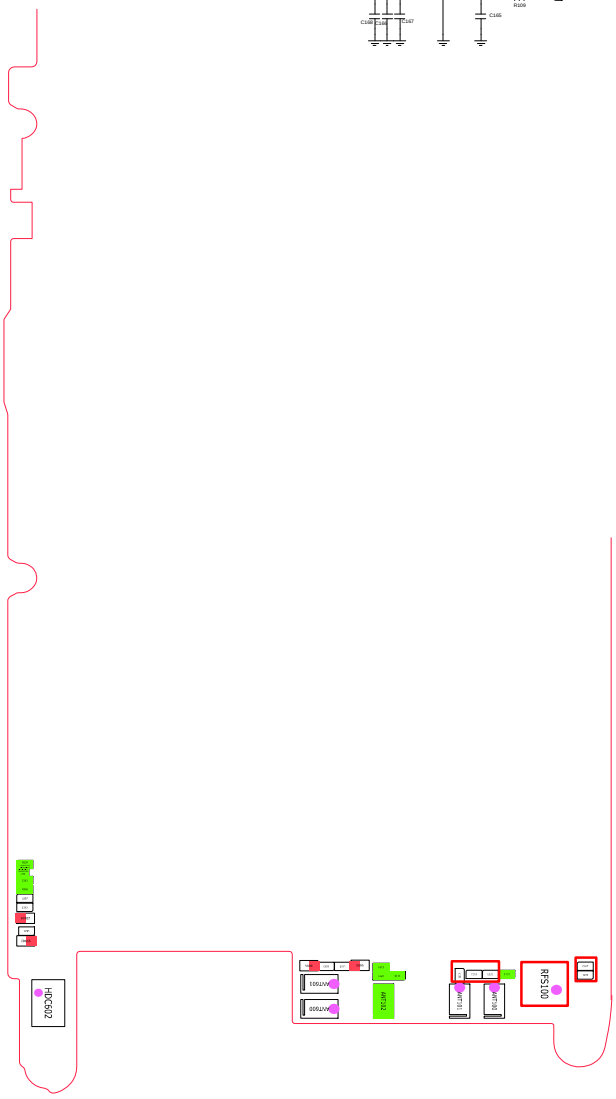




SAMSUNG Proprietary-Contents may change without notice
This Document can not be used without Samsung's authorization

## 8-3-16. WCDMA Band1 RX

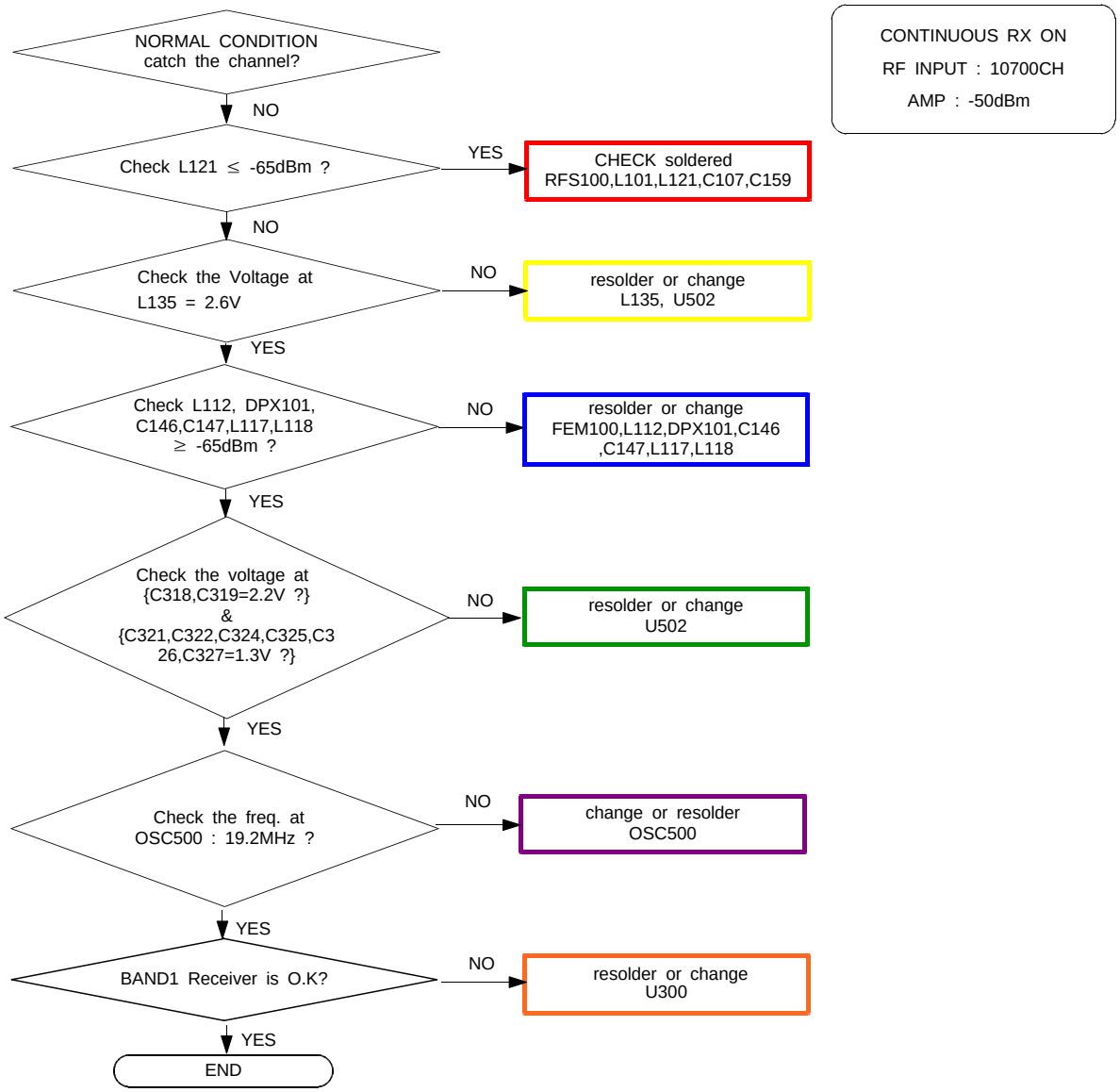




SAMSUNG Proprietary-Contents may change without notice
This Document can not be used without Samsung's authorization

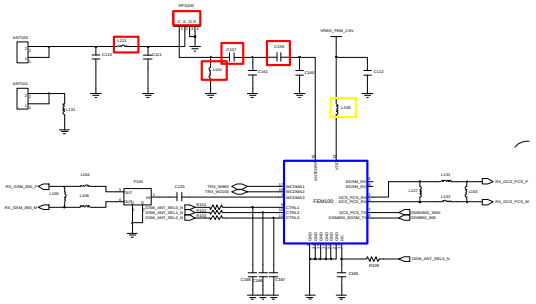

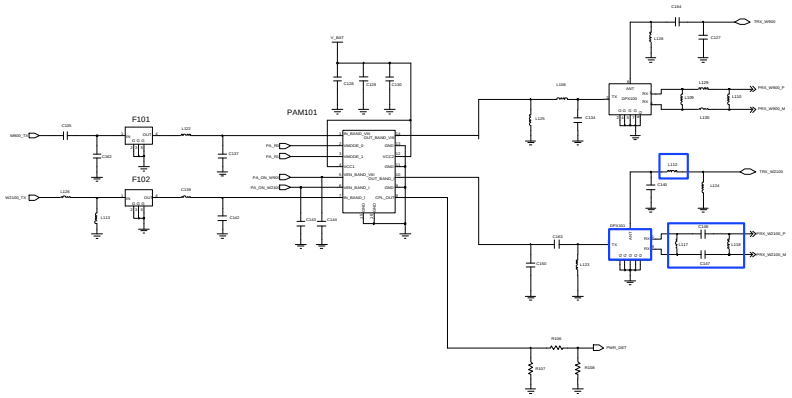

< WCDMA BAND1/BAND8 Discrete & PAD >

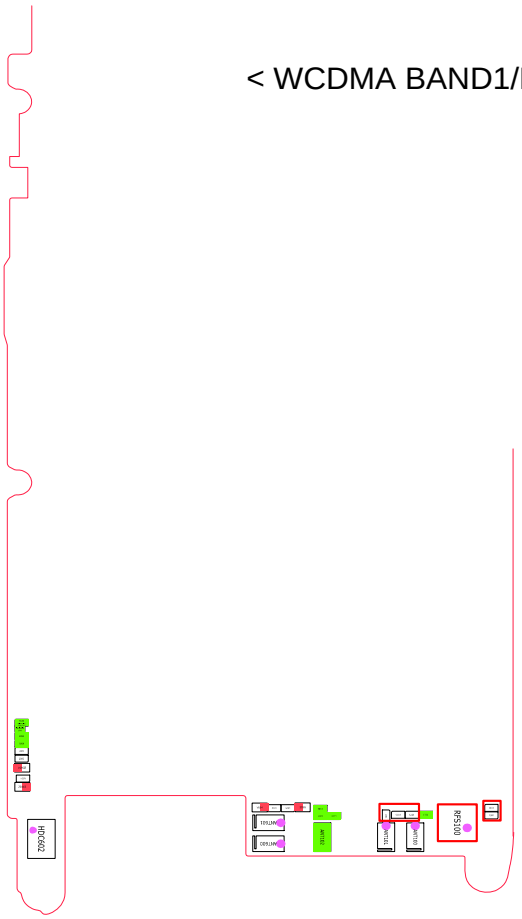

SAMSUNG Proprietary-Contents may change without notice
This Document can not be used without Samsung's authorization

## 8-3-17. WCDMA Band8 / GSM900 RX

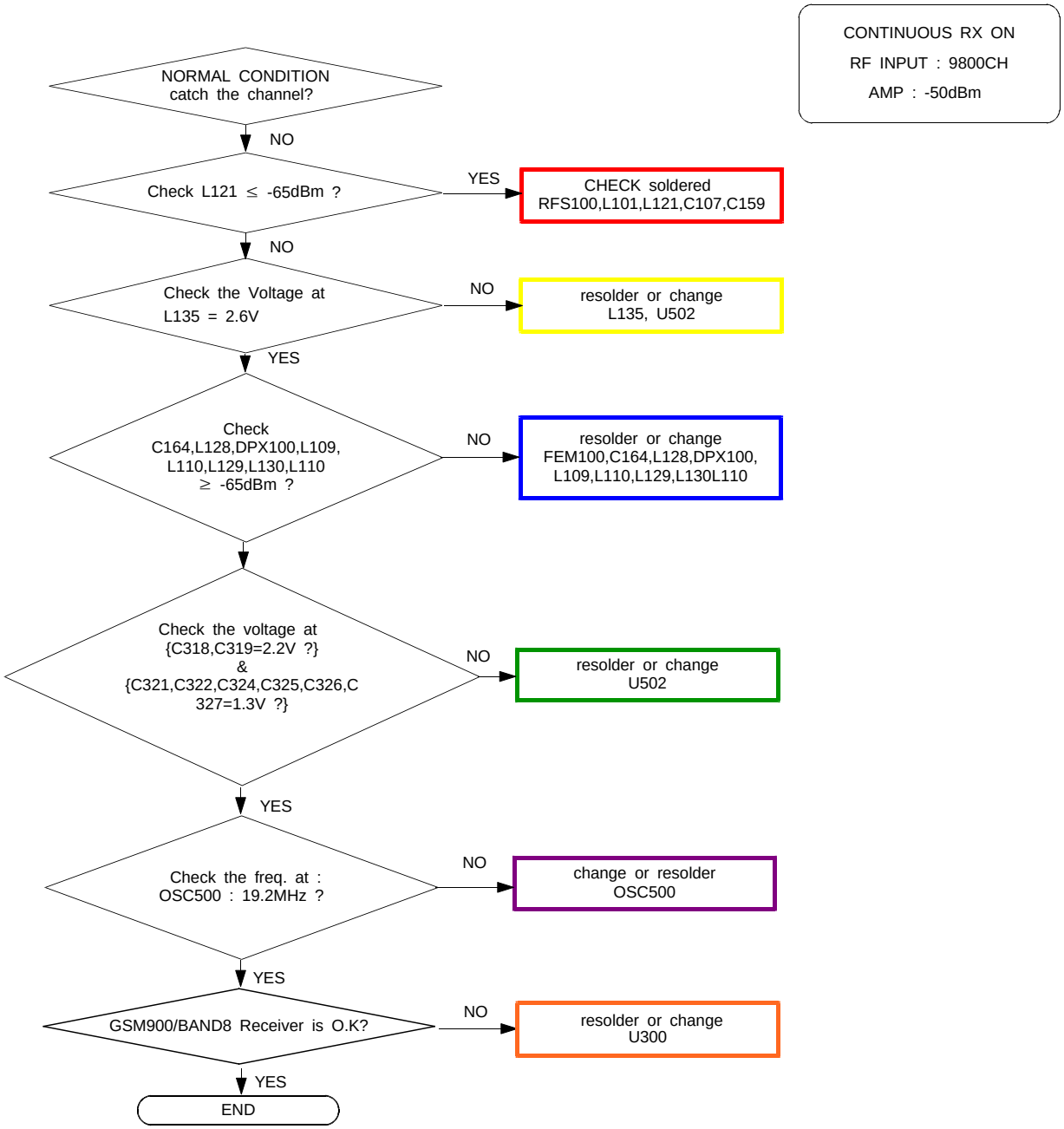




SAMSUNG Proprietary-Contents may change without notice
This Document can not be used without Samsung's authorization

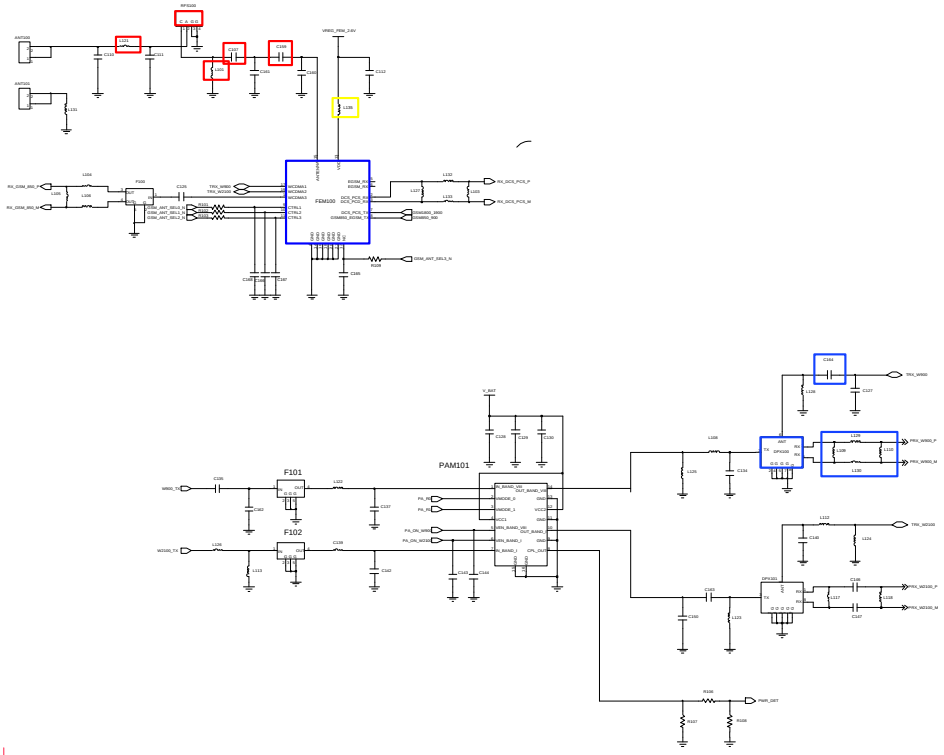


< WCDMA BAND1/BAND8 Discrete & PAD >

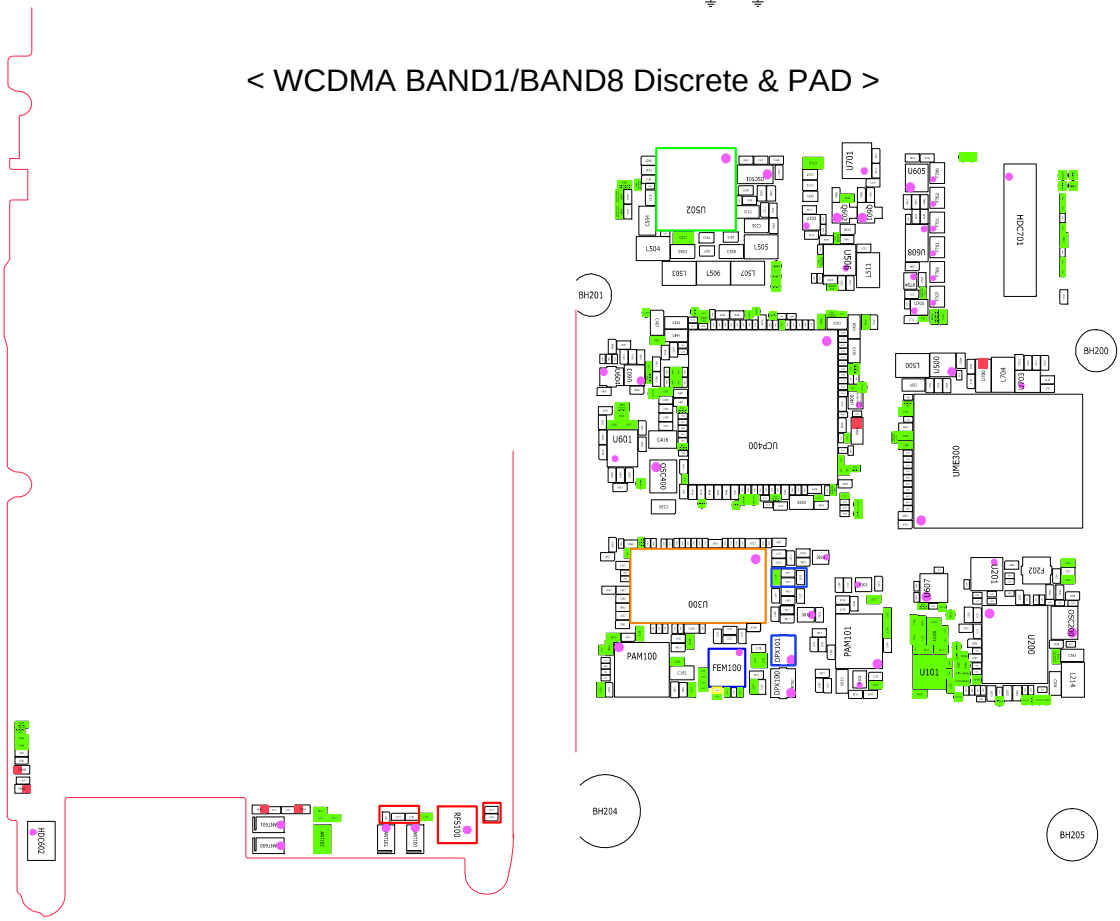




SAMSUNG Proprietary-Contents may change without notice
This Document can not be used without Samsung's authorization

## 8-3-19. GSM850/GSM900 TX

CONTINOUS TX ON CONDITION
TX POWER DAC:14500 CODE APPLIED
GSM850 CH : 190
GSM900 CH : 62
RBW : 100KHz
VBW : 100KHz
SPAN : 10MHz
REF LEV. : 10dBm
ATT. : 20dB

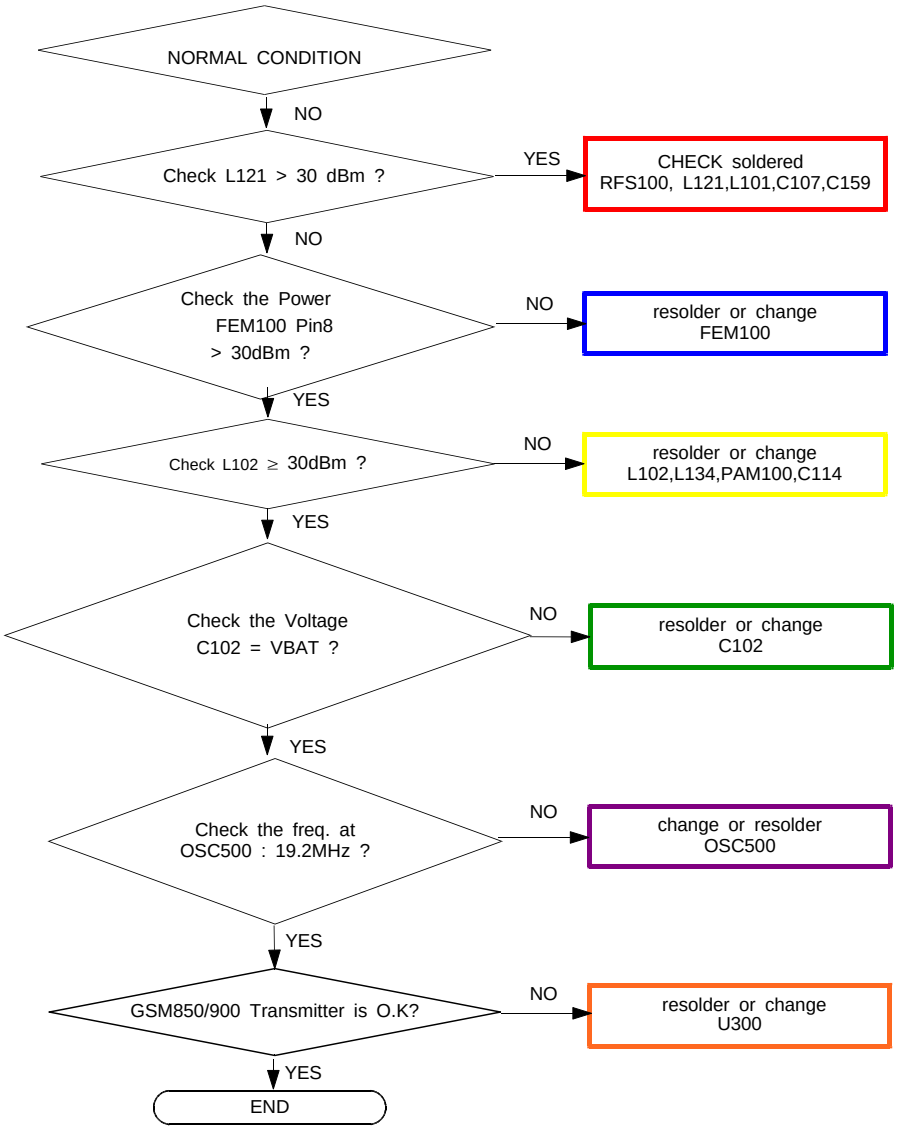




SAMSUNG Proprietary-Contents may change without notice
This Document can not be used without Samsung's authorization

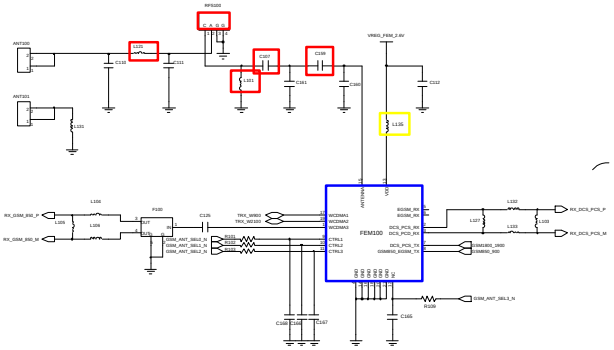


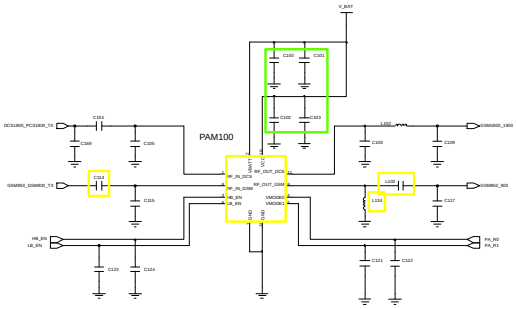


< 2G PAM >

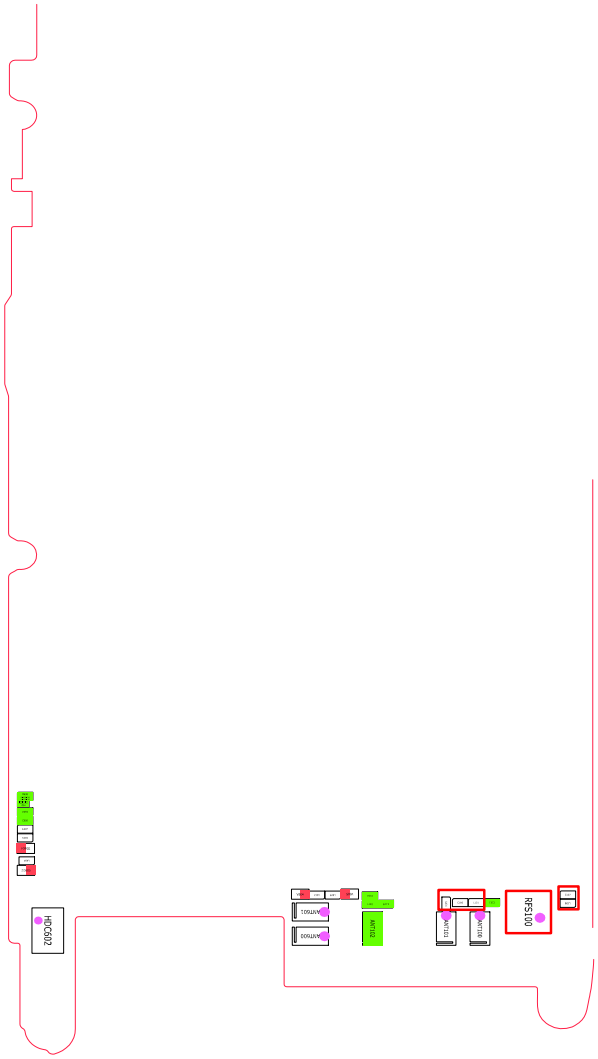

SAMSUNG Proprietary-Contents may change without notice
This Document can not be used without Samsung's authorization

## 8-3-20. DCS/PCS TX

CONTINOUS TX ON CONDITION
TX POWER DAC:14500 CODE APPLIED
GSM850 CH : 190
GSM900 CH : 698
RBW : 100KHz
VBW : 100KHz
SPAN : 10MHz
REF LEV. : 10dBm
ATT. : 20dB

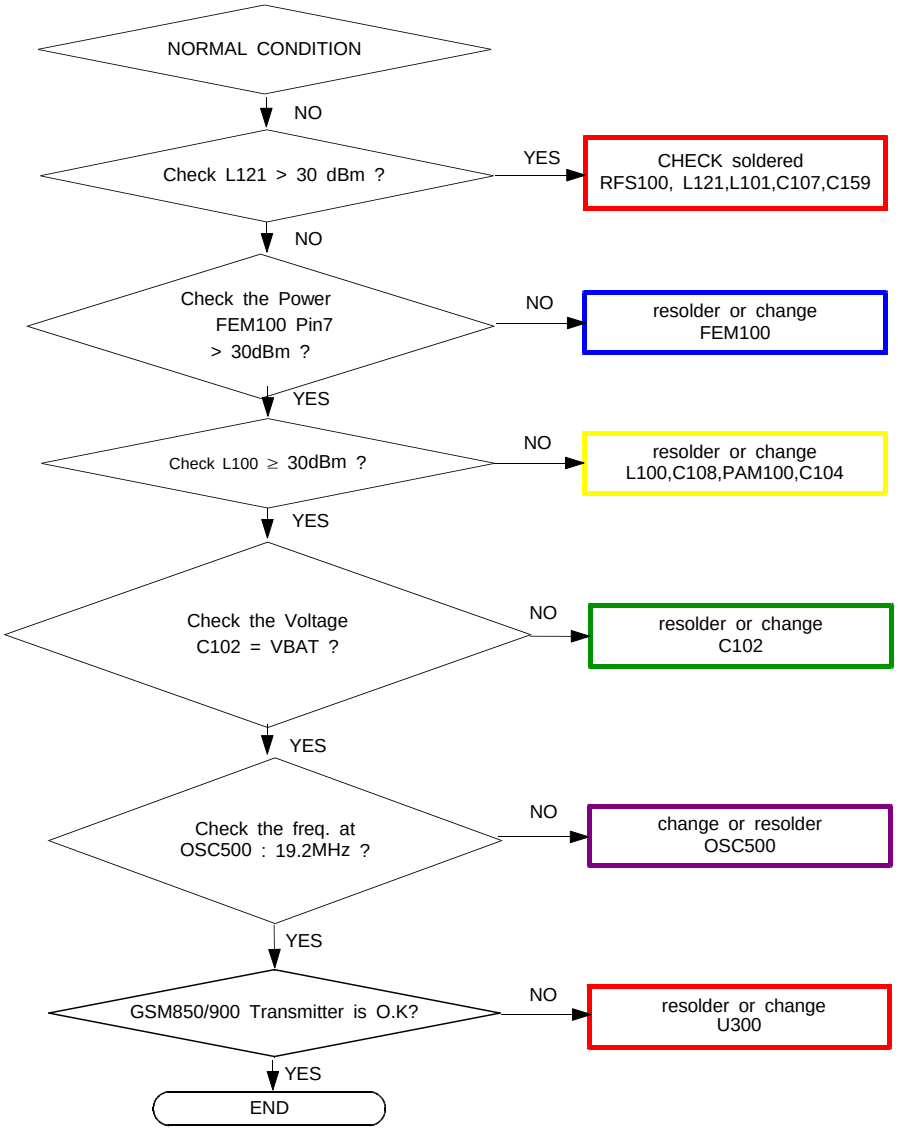




SAMSUNG Proprietary-Contents may change without notice
This Document can not be used without Samsung's authorization

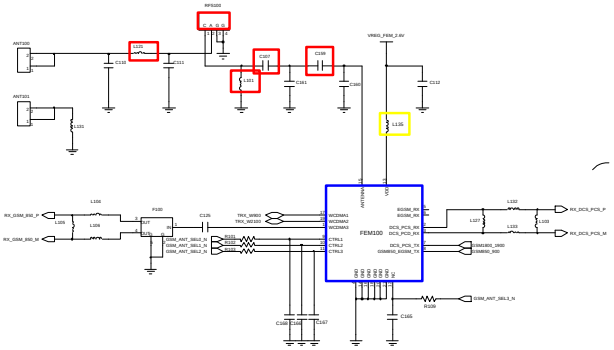


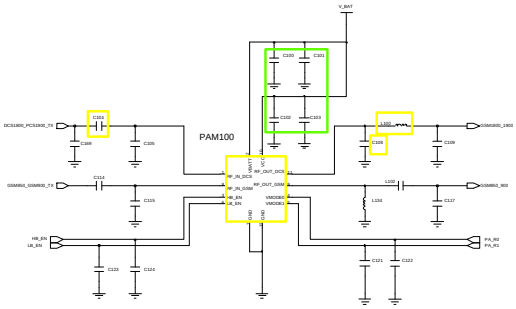


< 2G PAM >

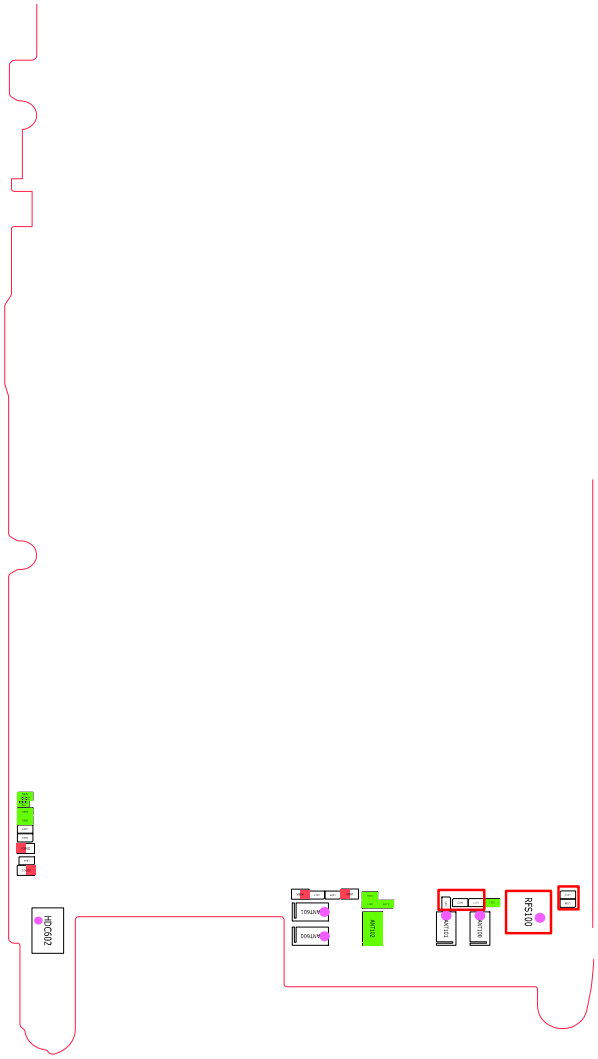

SAMSUNG Proprietary-Contents may change without notice
This Document can not be used without Samsung's authorization

## 8-3-21. WCDMA BAND1 TX

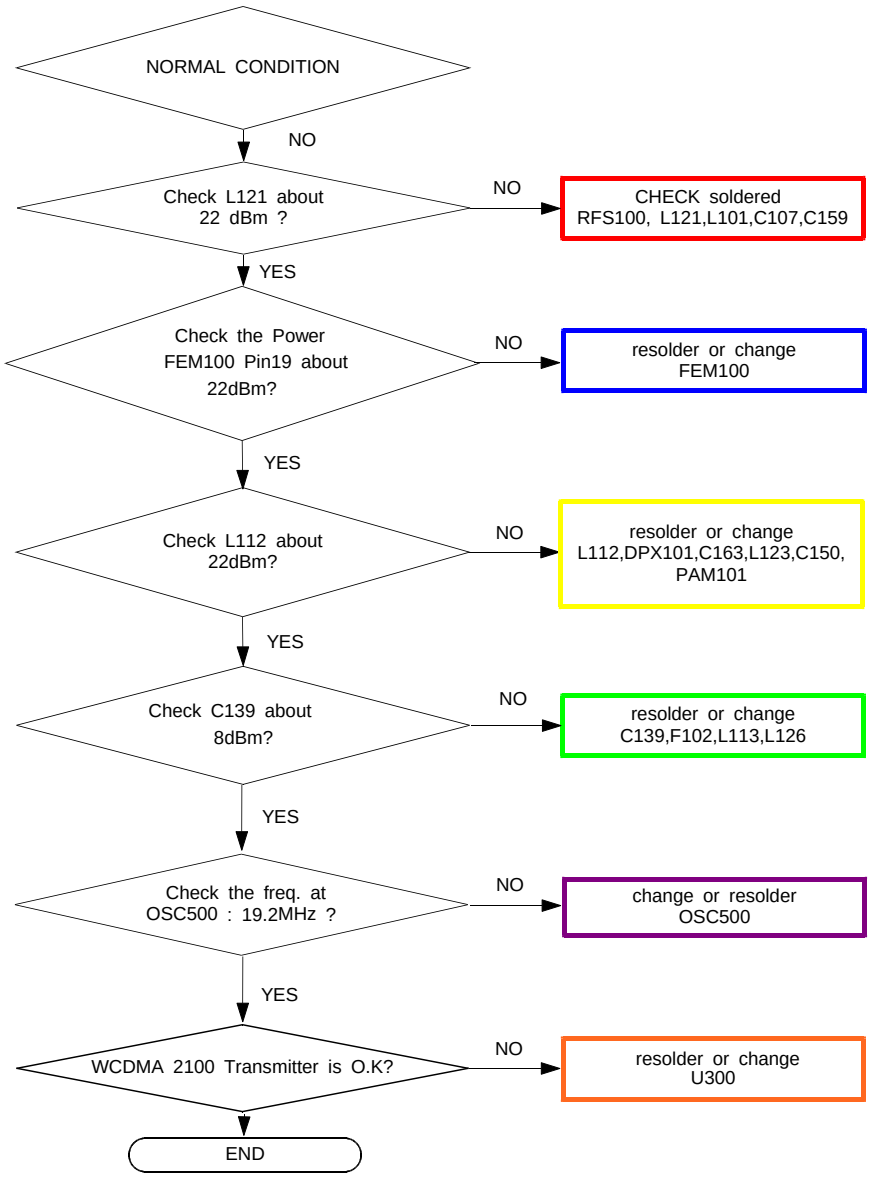




SAMSUNG Proprietary-Contents may change without notice
This Document can not be used without Samsung's authorization

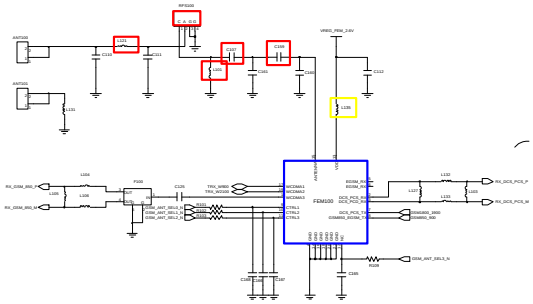

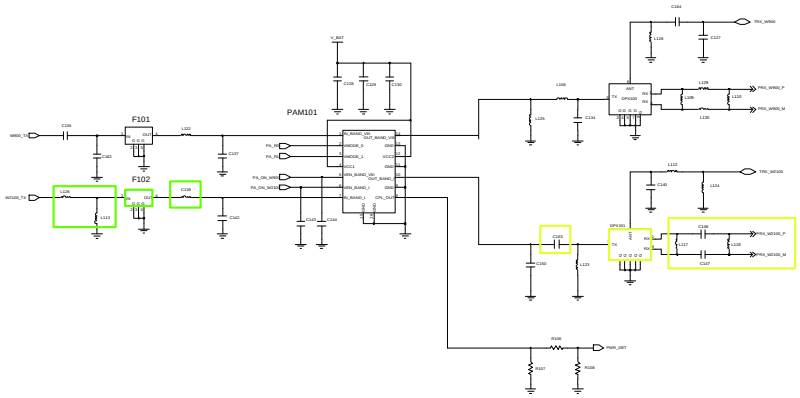

< WCDMA BAND1/BAND8 Discrete & PAD >

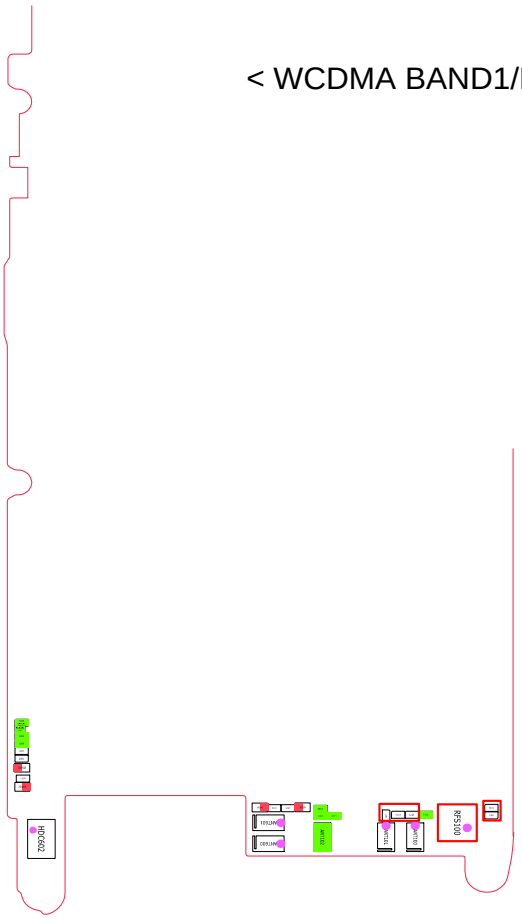

SAMSUNG Proprietary-Contents may change without notice
This Document can not be used without Samsung's authorization

## 8-3-22. WCDMA BAND 8TX

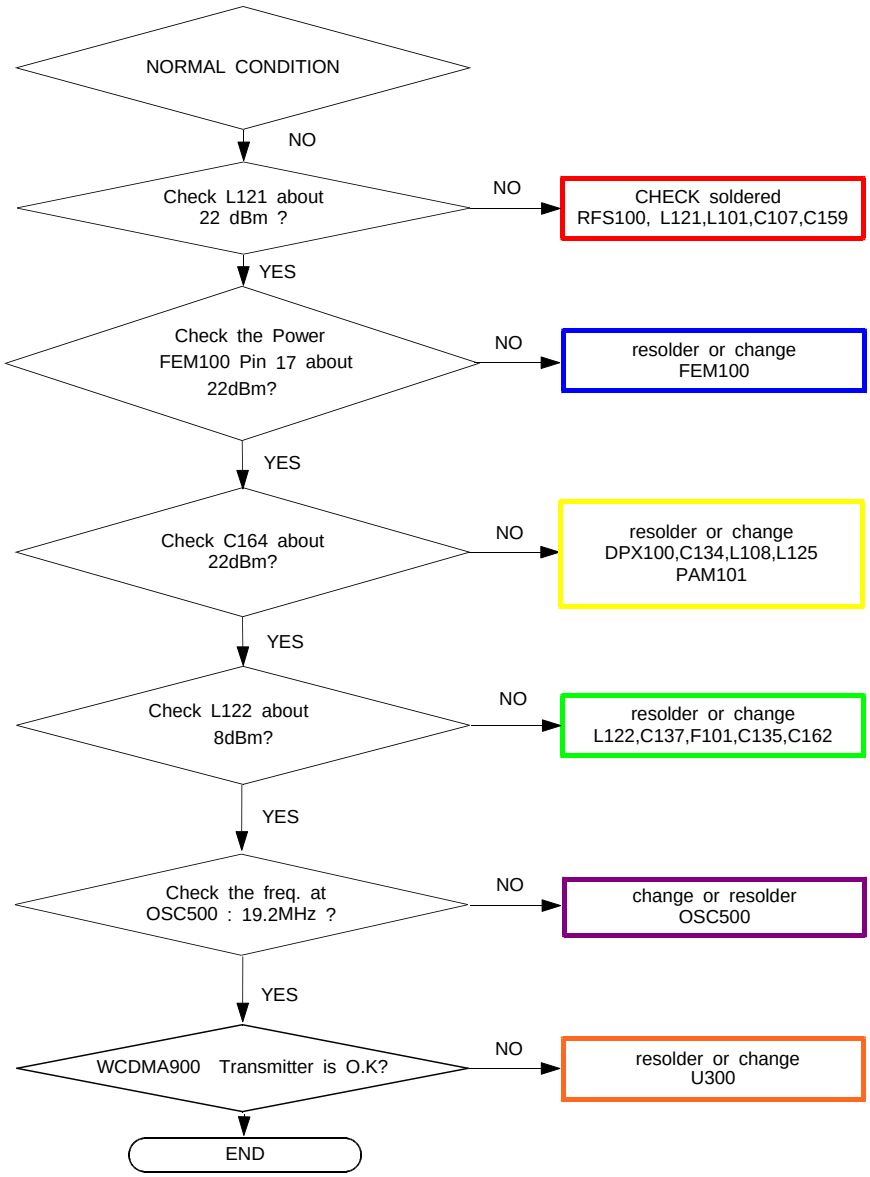




SAMSUNG Proprietary-Contents may change without notice
This Document can not be used without Samsung's authorization

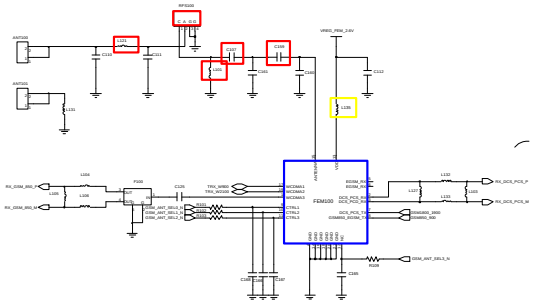

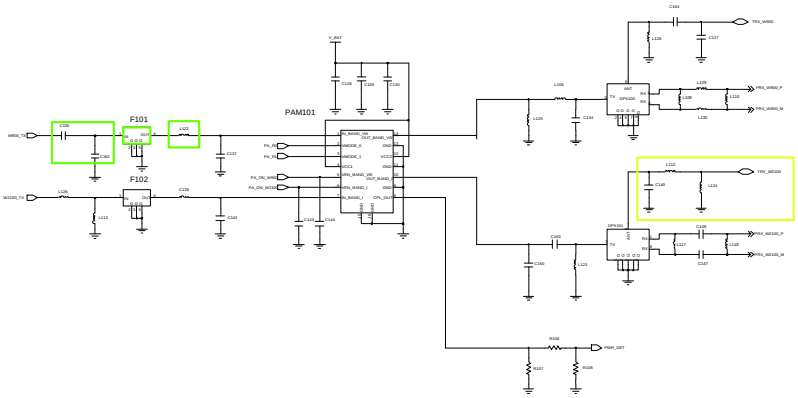


< WCDMA BAND1/BAND8 Discrete & PAD >

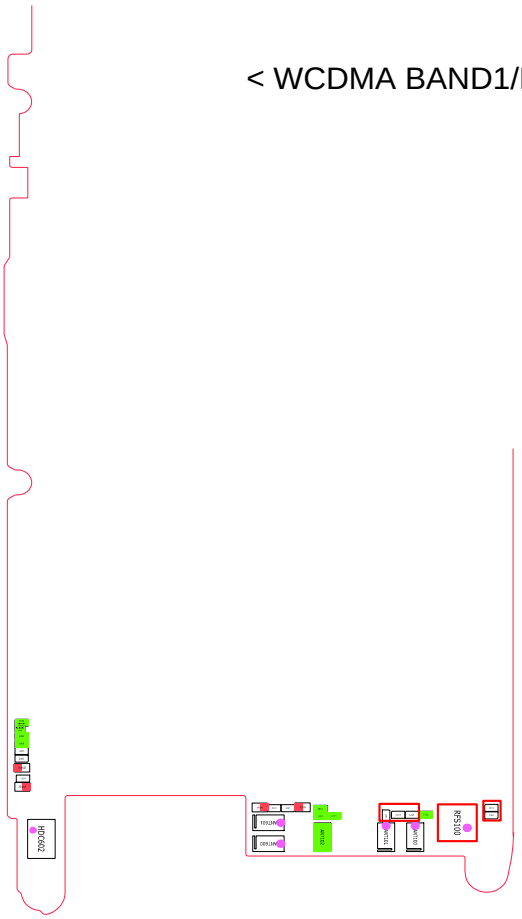

SAMSUNG Proprietary-Contents may change without notice
This Document can not be used without Samsung's authorization

## 8-4. Service Schematics

## - NC Point

: NC

: DNC

**UCP400**

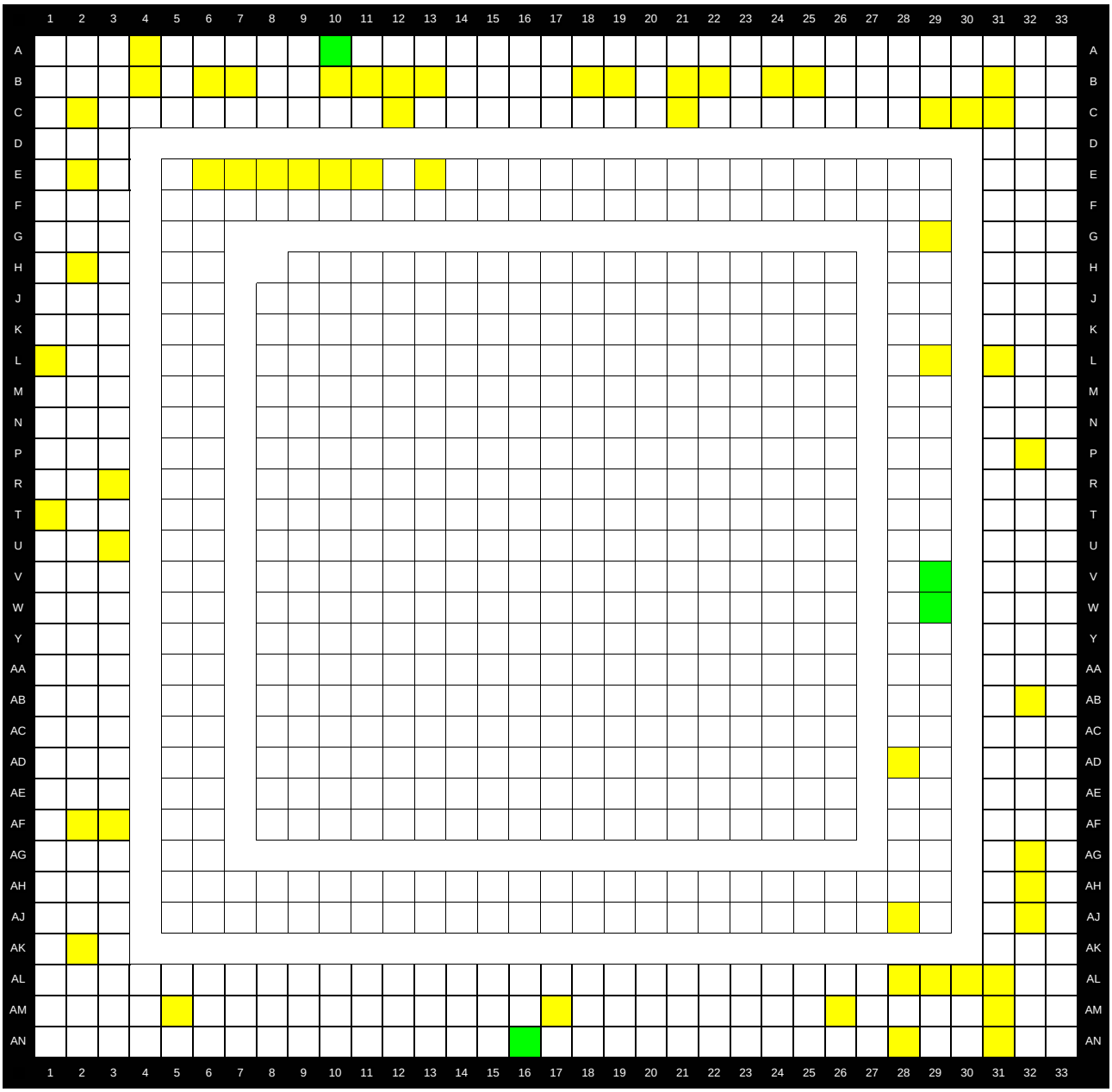




SAMSUNG Proprietary-Contents may change without notice
This Document can not be used without Samsung's authorization

: **DNC**

**U502**

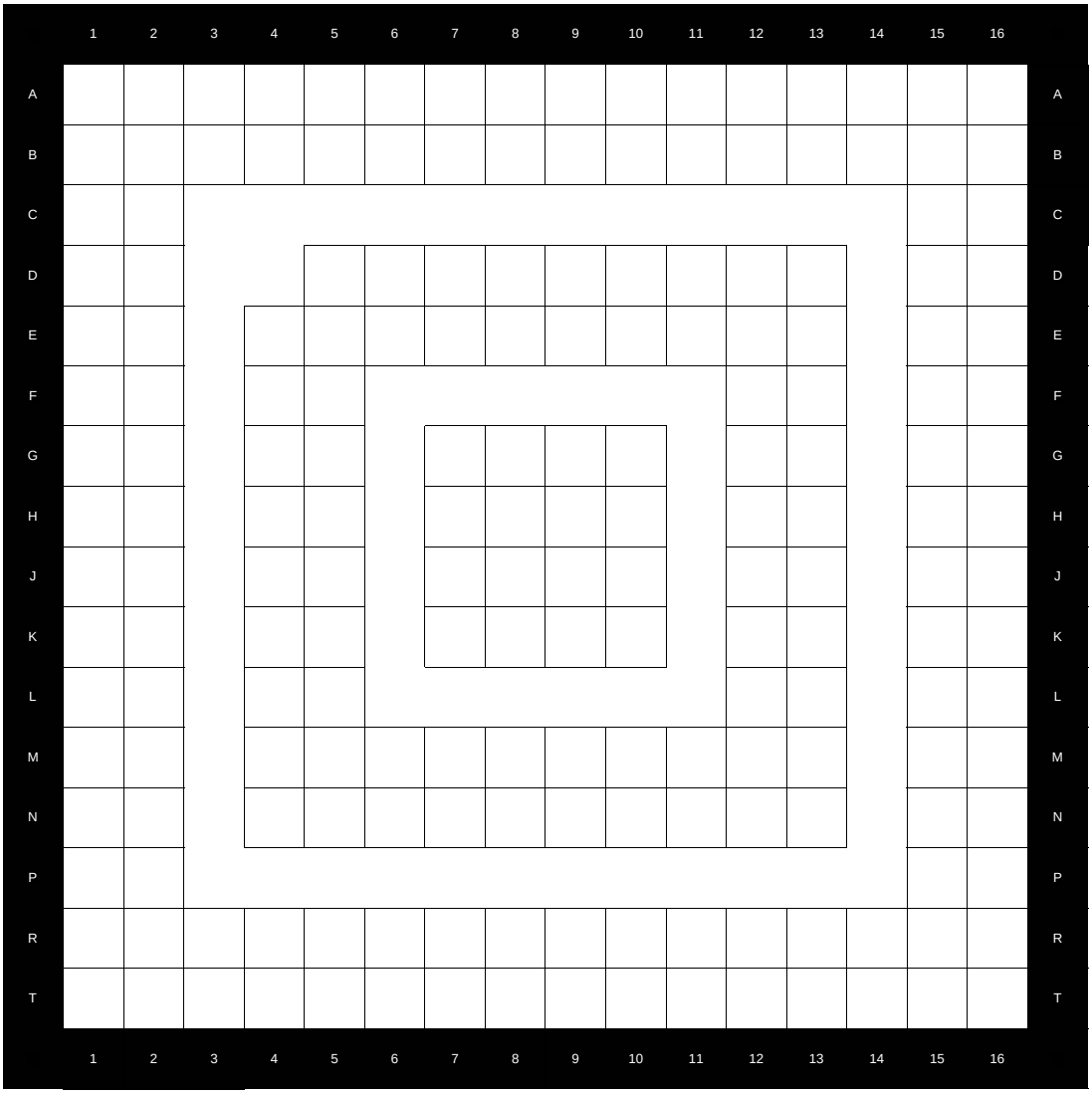




SAMSUNG Proprietary-Contents may change without notice
This Document can not be used without Samsung's authorization

: **DNC**

**U300**

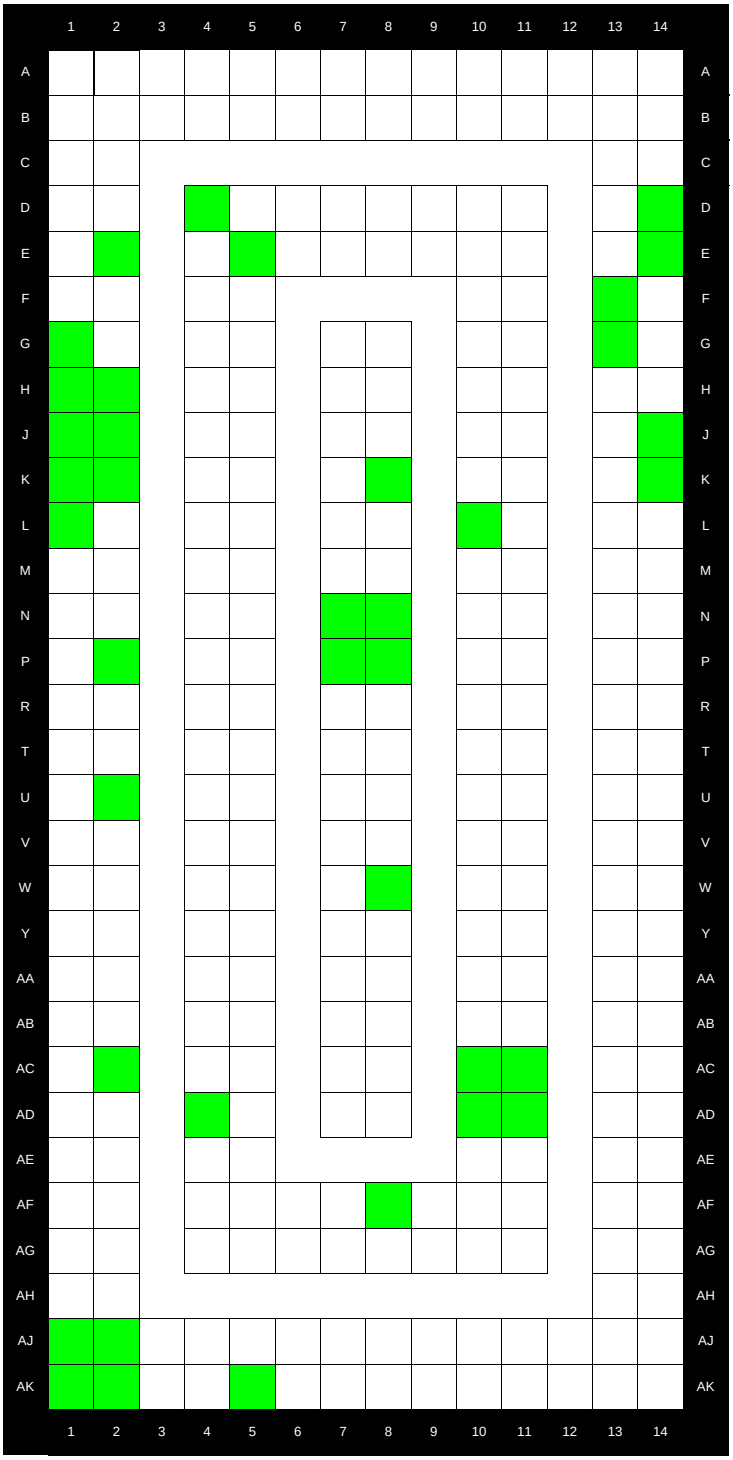




SAMSUNG Proprietary-Contents may change without notice
This Document can not be used without Samsung's authorization

● : NC

**UME300**

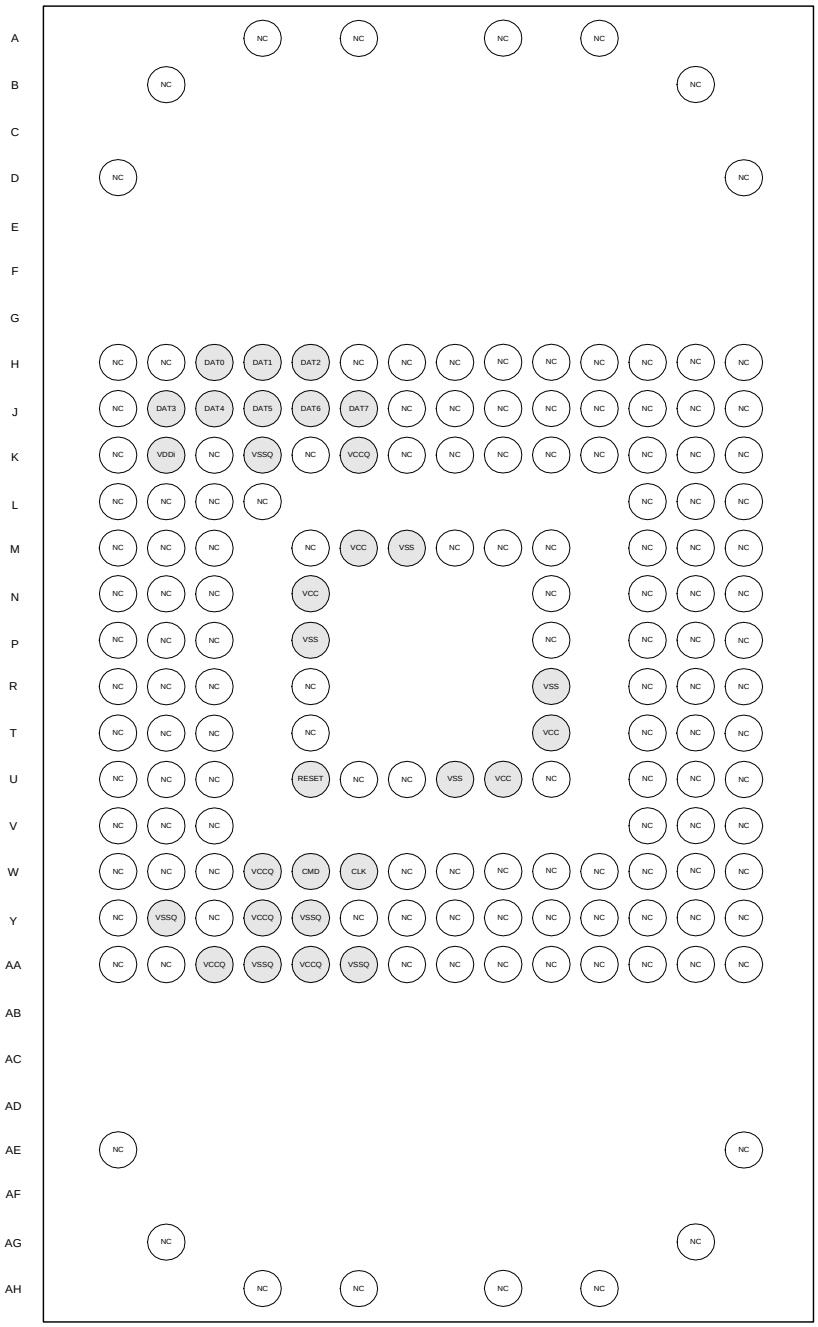




SAMSUNG Proprietary-Contents may change without notice
This Document can not be used without Samsung's authorization